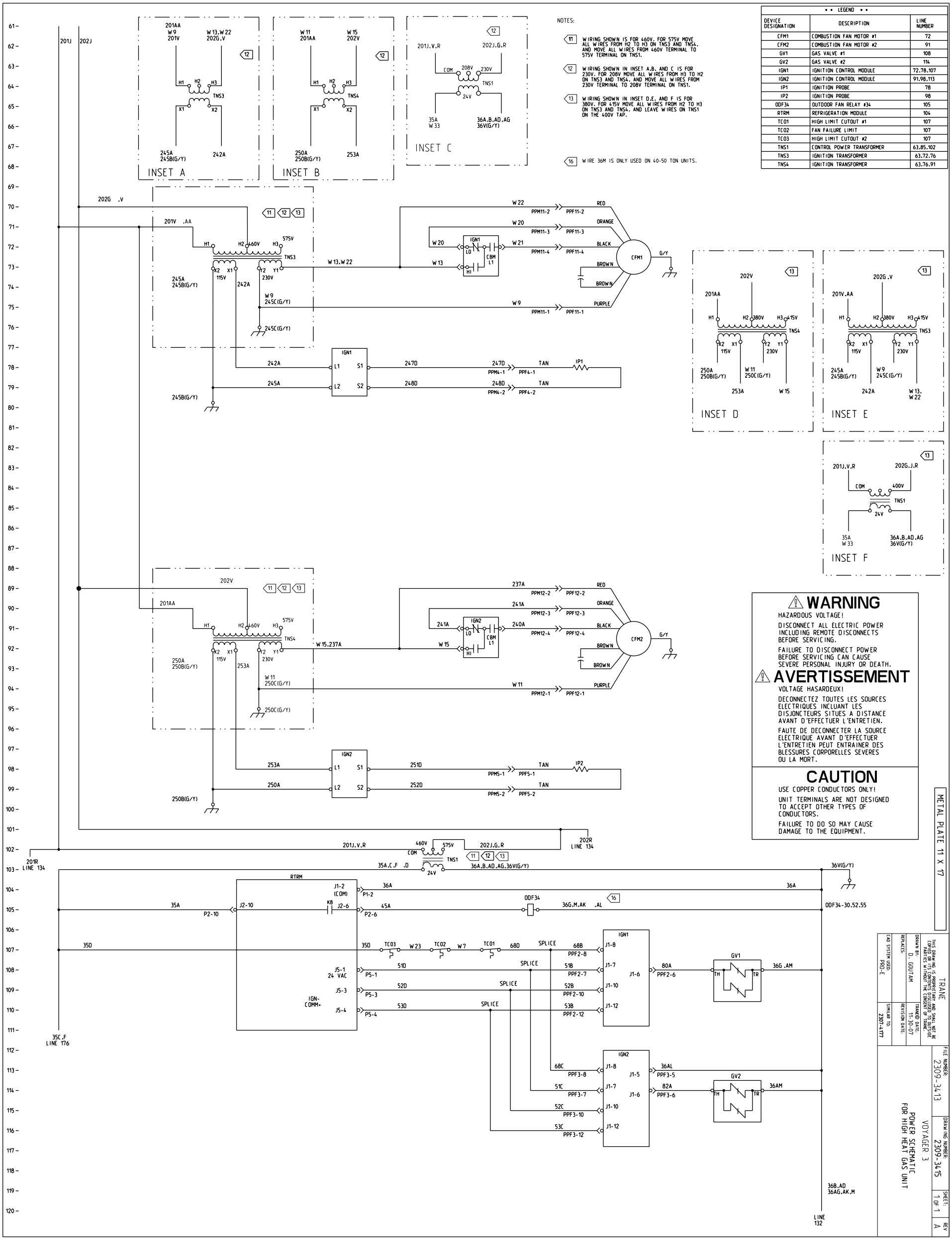

NOTES:

11 WIRING SHOWN IS FOR 460V. FOR 575V MOVE ALL WIRES FROM H2 TO H3 ON TNS3 AND TNS4. AND MOVE ALL WIRES FROM 460V TERMINAL TO 575V TERMINAL ON TNS1.

12 WIRING SHOWN IN INSET A.B. AND C IS FOR 230V. FOR 208V MOVE ALL WIRES FROM H3 TO H2 ON TNS3 AND TNS4. AND MOVE ALL WIRES FROM 230V TERMINAL TO 208V TERMINAL ON TNS1.

13 WIRING SHOWN IN INSET D.E. AND F IS FOR 380V. FOR 415V MOVE ALL WIRES FROM H2 TO H3 ON TNS3 AND TNS4. AND LEAVE WIRES ON TNS1 ON THE 400V TAP.

16 WIRE 36M IS ONLY USED ON 40-50 TON UNITS.

• • LEGEND • •

DEVICE DESIGNATION	DESCRIPTION	LINE NUMBER
CFM1	COMBUSTION FAN MOTOR #1	72
CFM2	COMBUSTION FAN MOTOR #2	91
GV1	GAS VALVE #1	108
GV2	GAS VALVE #2	114
IGN1	IGNITION CONTROL MODULE	72.78.107
IGN2	IGNITION CONTROL MODULE	91.98.113
IP1	IGNITION PROBE	78
IP2	IGNITION PROBE	98
ODF34	OUTDOOR FAN RELAY #34	105
RTRM	REFRIGERATION MODULE	104
TCO1	HIGH LIMIT CUTOUT #1	107
TCO2	FAN FAILURE LIMIT	107
TCO3	HIGH LIMIT CUTOUT #2	107
TNS1	CONTROL POWER TRANSFORMER	63.85.102
TNS3	IGNITION TRANSFORMER	63.72.76
TNS4	IGNITION TRANSFORMER	63.76.91

⚠ WARNING

HAZARDOUS VOLTAGE!

DISCONNECT ALL ELECTRIC POWER INCLUDING REMOTE DISCONNECTS BEFORE SERVICING.

FAILURE TO DISCONNECT POWER BEFORE SERVICING CAN CAUSE SEVERE PERSONAL INJURY OR DEATH.

⚠ AVERTISSEMENT

VOLTAGE HASARDEUX!

DECONNECTEZ TOUTES LES SOURCES ELECTRIQUES INCLUANT LES DISJONCTEURS SITUES A DISTANCE AVANT D'EFFECTUER L'ENTRETIEN.

FAUTE DE DECONNECTER LA SOURCE ELECTRIQUE AVANT D'EFFECTUER L'ENTRETIEN PEUT ENTRAINER DES BLESSURES CORPORELLES SEVERES OU LA MORT.

CAUTION

USE COPPER CONDUCTORS ONLY!

UNIT TERMINALS ARE NOT DESIGNED TO ACCEPT OTHER TYPES OF CONDUCTORS.

FAILURE TO DO SO MAY CAUSE DAMAGE TO THE EQUIPMENT.

METAL PLATE 11 X 17

TRANE

THIS DRAWING IS PROPRIETARY AND SHALL NOT BE COPIED OR ITS CONTENTS DISCLOSED TO OUTSIDE PARTIES WITHOUT THE CONSENT OF TRANE.

DRAWN BY: D. GOUTAM
TRANE® DATE: 11-30-07
REPLACES:
REVISION DATE:
CAD SYSTEM USED: PRO-E
SIMILAR TO: 2307-4177

FILE NUMBER: 2309-3413
DRAWING NUMBER: 2309-3415
SHEET: 1 OF 1
REV: A

VOYAGER 3

POWER SCHEMATIC
FOR HIGH HEAT GAS UNIT