NOTES:

21 WIRING SHOWN IS FOR HOOKUP WITHOUT COMM. BOARD HOOK PPF14(VAV) OR PPF13(CV) TO RTRM J4. WITH OPTL. COMM. BOARD, HOOK PPF14 OR PPF13 TO COMM J2, P14 TO RTRM J4 AND P21 TO COMM J1. SEE INSET A FOR WIRE NUMBERS.

22 WIRE 36AE IS NOT USED FOR THE TC/TE/YC_420 OR TC/TE/YC_600.

24 REQUIRED FOR OPT. REFERENCE ENTHALPY CONTROL.

25 REQUIRED FOR OPT. COMPARATIVE ENTHALPY CONTROL.

26 WIRES 174A & 161A REQUIRED ONLY FOR TC (COOLING/NO HEAT) UNITS. WIRES 67B, 65E & 64D REQUIRED ONLY FOR TE (COOLING/ELECTRIC HEAT) UNITS.

28 REQUIRED FOR OPTIONAL POWER EXHAUST.

29 OPTIONAL CLOGGED FILTER SWITCH.

30 REQUIRED FOR OPTIONAL VAV.

31 REQUIRED FOR OPTIONAL VFD.

32 SEE APPLICABLE VARIABLE FREQUENCY DRIVE DIAGRAM FOR BALANCE OF CIRCUIT.

33 PLUG(S) LOCATED IN MAIN CONTROL PANEL

34 WIRES REQUIRED ONLY FOR V.F.D. WITH BYPASS OPTION.

35 WIRES 154A & 155A (P34) REQUIRED FOR VAV W/ IGV OPTION. WIRES 154B & 155B (P35) REQUIRED FOR VAV W/ VFD OPTION.

⚠ WARNING

HAZARDOUS VOLTAGE!

DISCONNECT ALL ELECTRIC POWER INCLUDING REMOTE DISCONNECTS BEFORE SERVICING.

FAILURE TO DISCONNECT POWER BEFORE SERVICING CAN CAUSE SEVERE PERSONAL INJURY OR DEATH.

⚠ AVERTISSEMENT

VOLTAGE HASARDEUX!

DECONNECTEZ TOUTES LES SOURCES ELECTRIQUES INCLUANT LES DISJONCTEURS SITUES A DISTANCE AVANT D'EFFECTUER L'ENTRETIEN.

FAUTE DE DECONNECTER LA SOURCE ELECTRIQUE AVANT D'EFFECTUER L'ENTRETIEN PEUT ENTRAINER DES BLESSURES CORPORELLES SEVERES OU LA MORT.

⚠ CAUTION

USE COPPER CONDUCTORS ONLY!

UNIT TERMINALS ARE NOT DESIGNED TO ACCEPT OTHER TYPES OF CONDUCTORS.

FAILURE TO DO SO MAY CAUSE DAMAGE TO THE EQUIPMENT.

IMPORTANT!
DO NOT ENERGIZE UNIT UNTIL CHECK-OUT AND START-UP PROCEDURE HAS BEEN COMPLETED

FUSE REPLACEMENT TABLE			
FU1	208-230V	CLASS CC	20 AMP
FU2	380-415V	CLASS CC	15 AMP
	460-575V	CLASS CC	15 AMP
FU3	208-230V	CLASS CC	15 AMP
FU4	380-415V	N/A	N/A
	460-575V	N/A	N/A
FU5	208-230V	CLASS CC	20 AMP
FU6	380-415V	CLASS CC	15 AMP
	460-575V	CLASS CC	15 AMP
FU20	208-230V	CLASS CC	10 AMP
FU21	460-575V	CLASS CC	5 AMP
FU11-	208-230V	TYPE RK5	60 AMP
FU19	380-575V	TYPE RK5	60 AMP

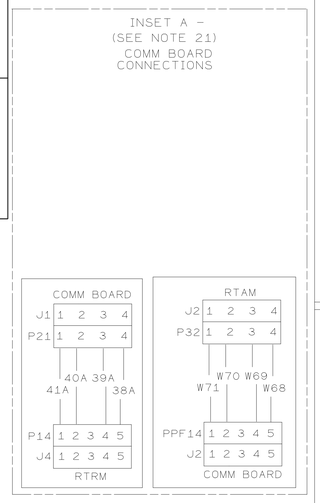

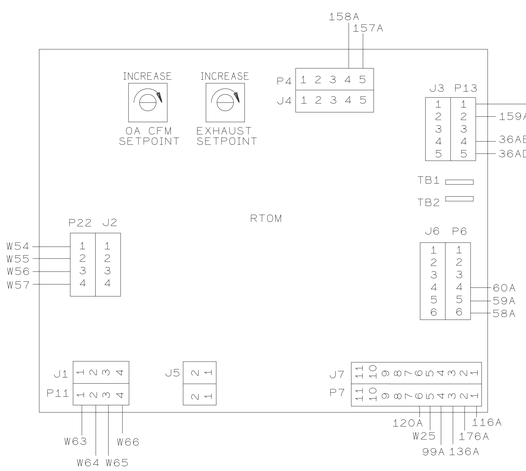

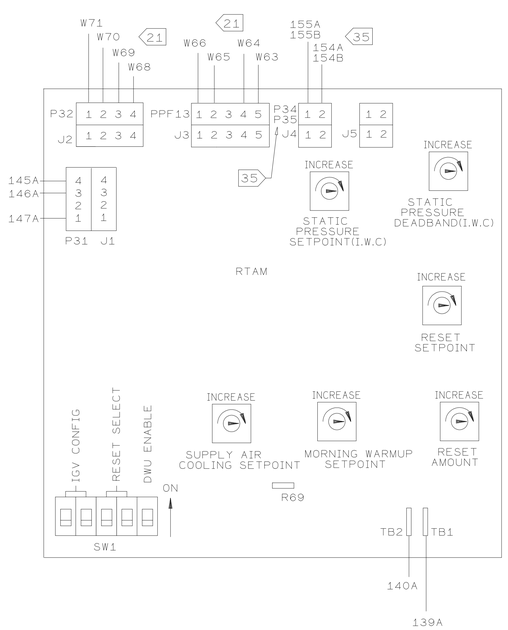

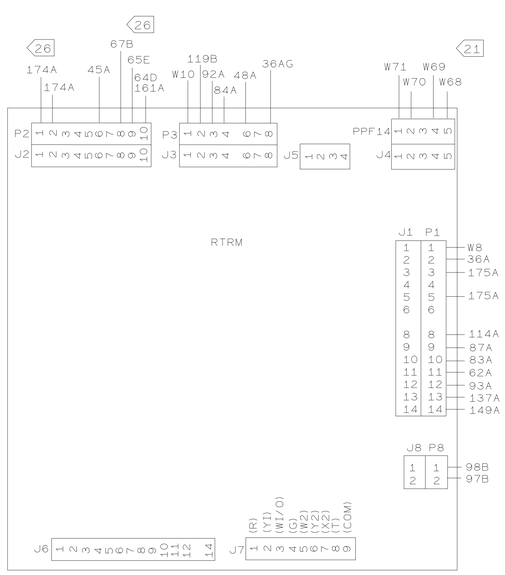

CONDENSER SECTION WIRING

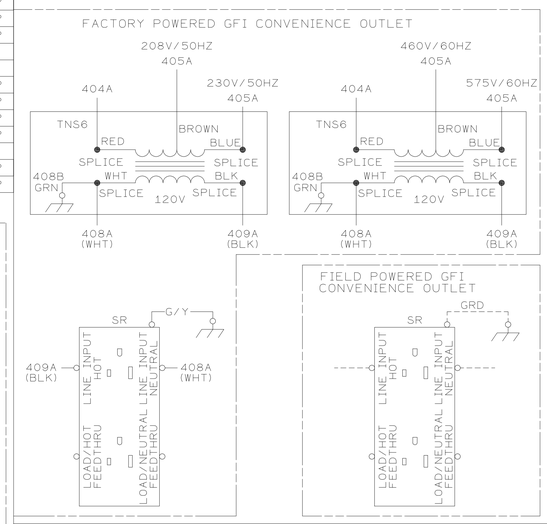

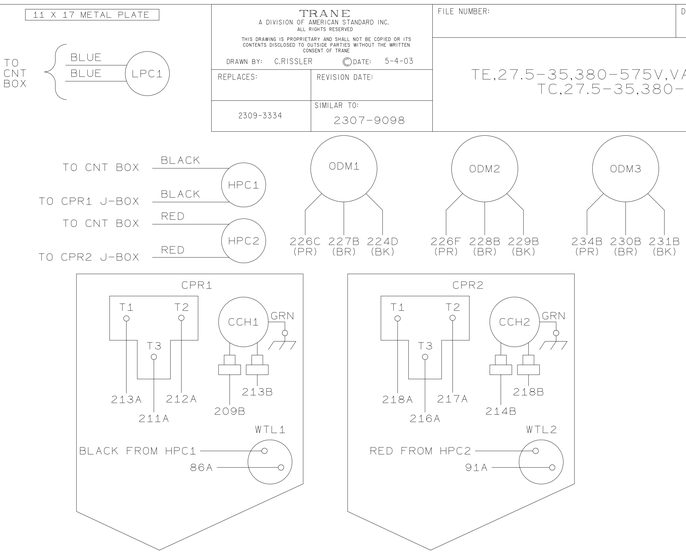

TRANE
A DIVISION OF AMERICAN STANDARD INC.

ALL RIGHTS RESERVED
THIS DRAWING IS PROPRIETARY AND SHALL NOT BE COPIED OR ITS CONTENTS DISCLOSED TO OUTSIDE PARTIES WITHOUT THE WRITTEN CONSENT OF TRANE

DRAWN BY: C.RISSLER DATE: 5-4-03

REPLACES: 2309-3334

REVISION DATE:

SIMILAR TO: 2307-9098

FILE NUMBER:

DRAWING NUMBER: 2309-3348 REV C

TE.27.5-35.380-575V.VAV.36 & 54 KW & TC.27.5-35.380-575V.VAV

23 HEAT SECTION WIRING 23

36 KW HEAT

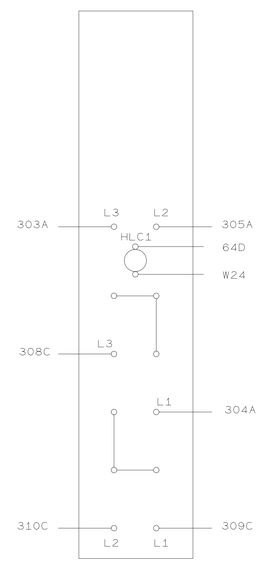

54 KW HEAT

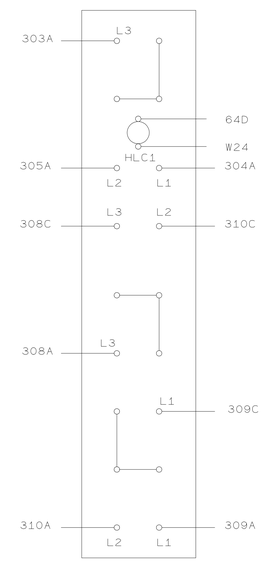

RETURN AIR SECTION WIRING

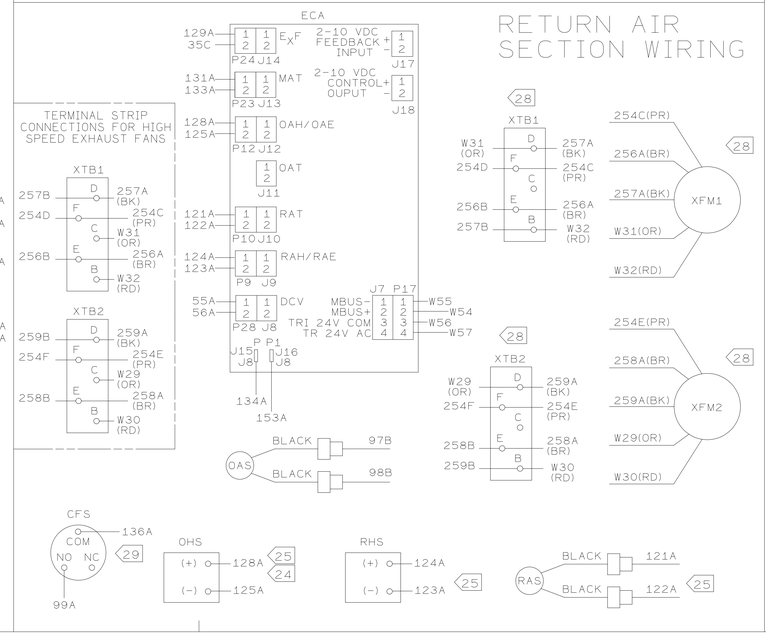
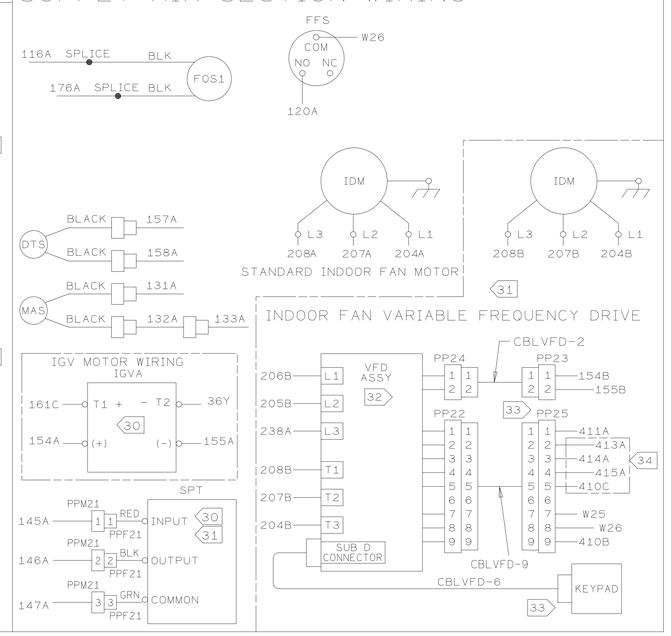
SUPPLY AIR SECTION WIRING