NOTES:

1. WIRING SHOWN IS FOR 230V. FOR 208V MOVE ALL WIRES FROM 230V TERMINAL TO 208V TERMINAL ON TNS1.
2. WIRING SHOWN IS FOR 230V. FOR 208V MOVE ALL WIRES FROM 230V TERMINAL TO 208V TERMINAL ON TNS2.
3. WIRING SHOWN IS FOR 230V. FOR 208V MOVE ALL WIRES FROM 230V TERMINAL TO 208V TERMINAL ON TNS5.
8. FUSE FU5,FU6, RELAY XFR, CAPACITOR CF5,CF6 AND ASSOCIATED WIRES ARE ONLY USED WITH POWER EXHAUST OPTION.
10. WIRING SHOWN FOR F CONTACTOR AND FCB1 IS FOR ALL VAV UNITS, EXCEPT THOSE WITH VFD. WHEN VARIABLE FREQUENCY DRIVE IS INSTALLED SEE INSET B.
11. WIRING SHOWN IS FOR OPTIONAL COMMUNICATION INTERFACE. COMMUNICATION WIRES FROM BMS TO TCI/LCI ARE TO BE WIRE TIED TO BOTTOM OF THE CONTROL BOX. SEE TCI/LCI LITERATURE FOR SWITCH SETTINGS.
12. FUSE FU20, FU21 AND SWITCH SRD ARE USED FOR OPTIONAL FACTORY POWER CONVENIENCE OUTLET. WIRES 400A AND 401A ARE CONNECTED TO FACTORY SUPPLIED DISCONNECT SWITCH.
14. MANUAL BYPASS SWITCH AND WIRES 410C, 413A, 414A, 415A OPTIONAL.

METAL PLATE 11 X 17

IMPORTANT!
DO NOT ENERGIZE UNIT UNTIL CHECK-OUT AND START-UP PROCEDURE HAS BEEN COMPLETED

TRANE
A DIVISION OF AMERICAN STANDARD INC.
NO PART NUMBER
THIS DRAWING IS THE PROPERTY OF AMERICAN STANDARD INC. AND MAY NOT BE REPRODUCED OR TRANSMITTED IN WHOLE OR IN PART WITHOUT WRITTEN PERMISSION.

DRAWN BY	CHKD
REPLACES	REVISION DATE
2309-3282	SIMILAR TO: 2307-4698

FILE NUMBER

DRAWING NUMBER: 2309-3281 REV C

CONTROL BOX CONNECTION FOR TC 35 TON 208-230 VOLT VARIABLE AIR VOLUME

SHEET 1 OF 2

WARNING

HAZARDOUS VOLTAGE!

DISCONNECT ALL ELECTRIC POWER INCLUDING REMOTE DISCONNECTS BEFORE SERVICING.

FAILURE TO DISCONNECT POWER BEFORE SERVICING CAN CAUSE SEVERE PERSONAL INJURY OR DEATH.

AVERTISSEMENT

VOLTAGE HASARDEUX!

DECONNECTEZ TOUTES LES SOURCES ELECTRIQUES INCLUANT LES DISJONCTEURS SITUES A DISTANCE AVANT D'EFFECTUER L'ENTRETIEN.

FAUTE DE DECONNECTER LA SOURCE ELECTRIQUE AVANT D'EFFECTUER L'ENTRETIEN PEUT ENTRAINER DES BLESSURES CORPORELLES SEVERES OU LA MORT.

CAUTION

USE COPPER CONDUCTORS ONLY!

UNIT TERMINALS ARE NOT DESIGNED TO ACCEPT OTHER TYPES OF CONDUCTORS.
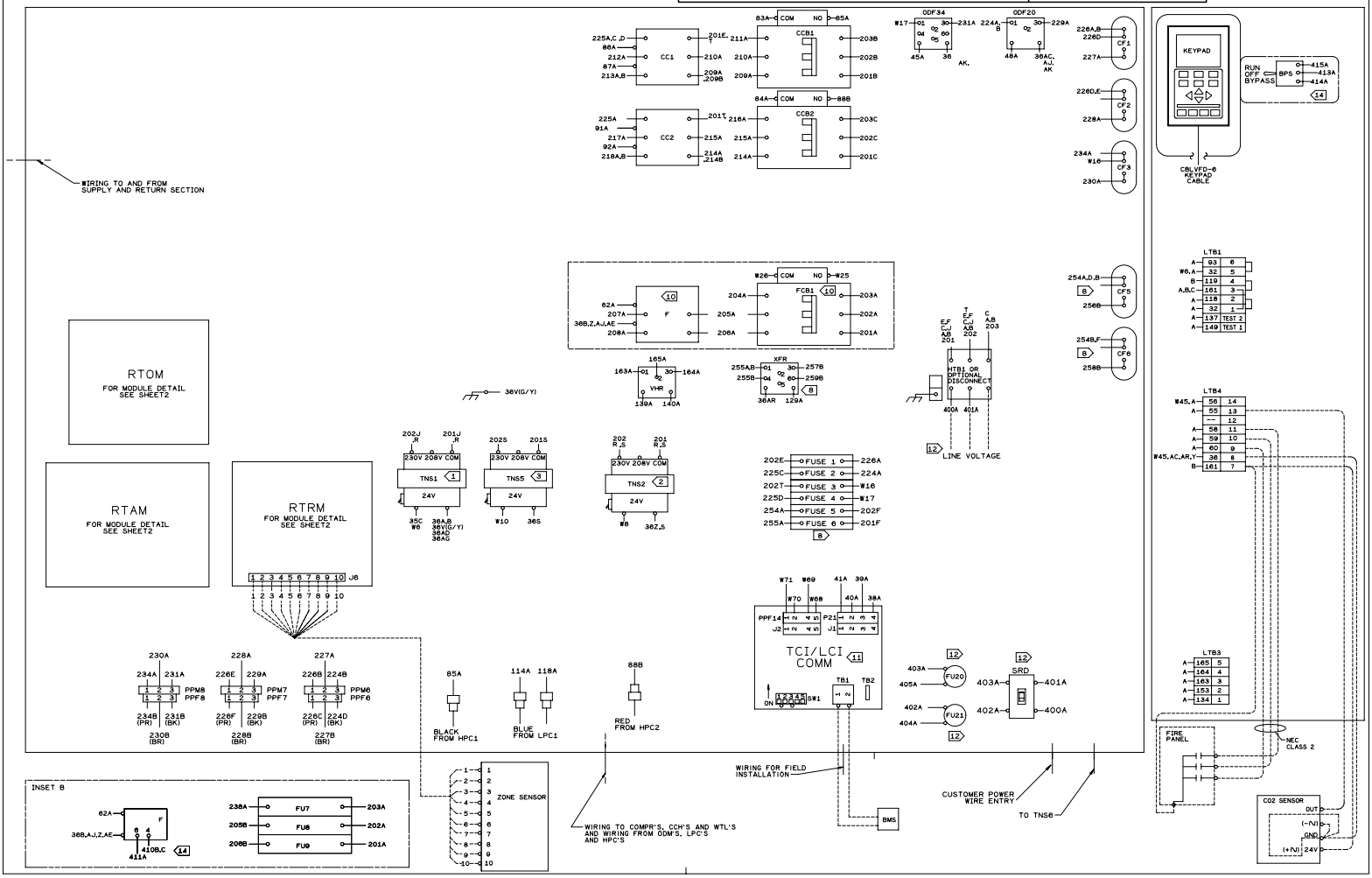
FAILURE TO DO SO MAY CAUSE DAMAGE TO THE EQUIPMENT.