10 X 15 METAL PLATE

TRANE	FILE NUMBER: 2313-0092	DRAWING NUMBER: 2309-3040	SHEET: 2 OF 3	REV B
THIS DRAWING IS PROPRIETARY AND SHALL NOT BE COPIED OR ITS CONTENTS DISCLOSED TO OUTSIDE PARTIES WITHOUT THE CONSENT OF TRANE.	ROOFTOP PACKAGED AIR CONDITIONER			
DRAWN BY: B.SMALLING	TRANE® DATE: 07/15/2001	CONNECTION WIRING DIAGRAM UNIT CONTROL MODULE DETAIL W/ EXHAUST FAN VARIABLE FREQUENCY DRIVE 90 - 130 TON S_HG		
REPLACES:	REVISION DATE:			
CAD SYSTEM USED:	SIMILAR TO: 2307-4065			

⚠ WARNING
HAZARDOUS VOLTAGE!
DISCONNECT ALL ELECTRIC POWER, INCLUDING REMOTE DISCONNECTS, BEFORE SERVICING.

FAILURE TO DISCONNECT POWER BEFORE SERVICING CAN CAUSE SEVERE PERSONAL INJURY OR DEATH.

⚠ AVERTISSEMENT
VOLTAGE HASARDEUX!
DECONNECTEZ TOUTES LES SOURCES ELECTRIQUES INCLUANT LES DISJONCTEURS SITUES A DISTANCE AVANT D'EFFECTUER L'ENTRETIEN.

FAUTE DE DECONNECTEZ LA SOURCE ELECTRIQUE AVANT D'EFFECTUER L'ENTRETIEN PEUT ENTRAINER DES BLESSURES CORPORELLES SEVERES OU LA MORT.

⚠ CAUTION
USE COPPER CONDUCTORS ONLY!

UNIT TERMINALS ARE NOT DESIGNED TO ACCEPT OTHER TYPES OF CONDUCTORS.

FAILURE TO DO SO MAY CAUSE DAMAGE TO THE EQUIPMENT.

NOTES:

21 WIRE NO S 540A & 430A REQUIRED WITH REFERENCE ENTHALPY AND COMPARATIVE ENTHALPY OPTIONS ONLY.

IMPORTANT!
DO NOT ENERGIZE UNIT UNTIL CHECK-OUT AND START-UP PROCEDURE HAS BEEN COMPLETED.

23 REFER TO DETAILS "2A", "2B", "2C" AND "2D" FOR CORRECT HEAT MODULE (1U50) CONNECTIONS.
DETAIL "2A" - ELECTRIC HEAT (SEHF - SEHG)
DETAIL "2B" - 2-STAGE NATURAL GAS HEAT (SFHF - SFHG)
DETAIL "2C" - STEAM OR HOT WATER HEAT (SSHF - SLHF)
DETAIL "2D" - MODULATING NATURAL GAS HEAT (SFHF - SFHG)

26 WIRE NO S 515A, 516A, 517A & 518A REQUIRED WITH COMPARATIVE ENTHALPY OPTION ONLY.
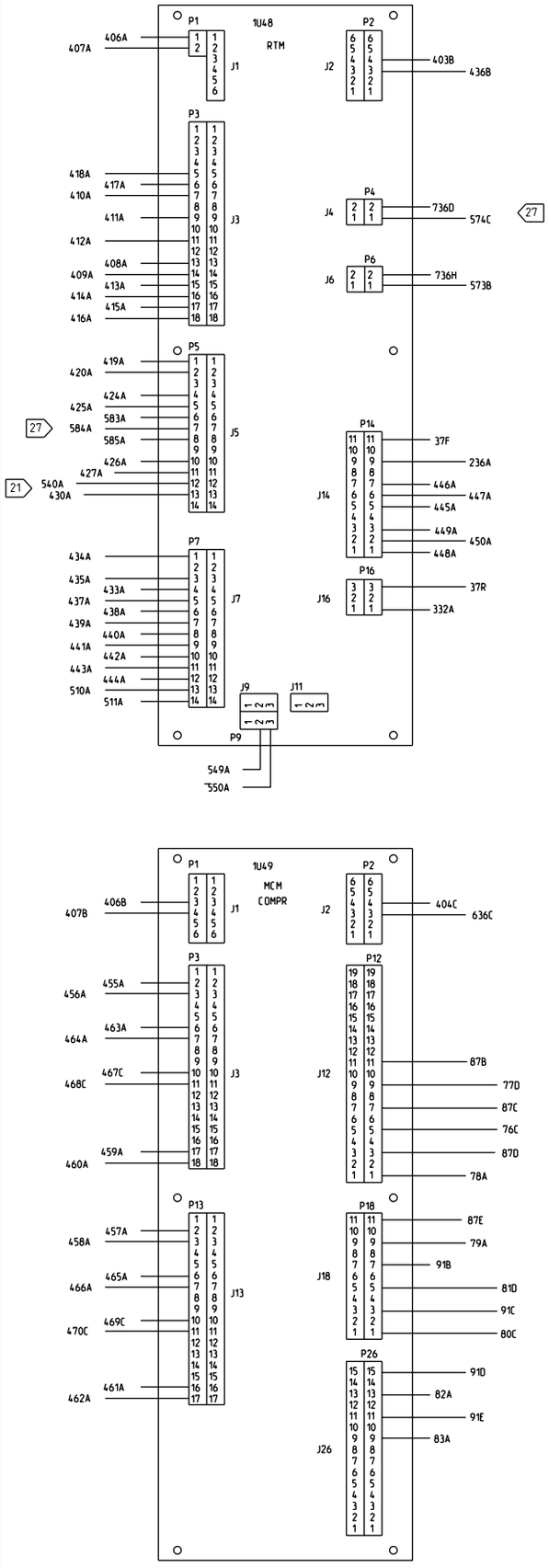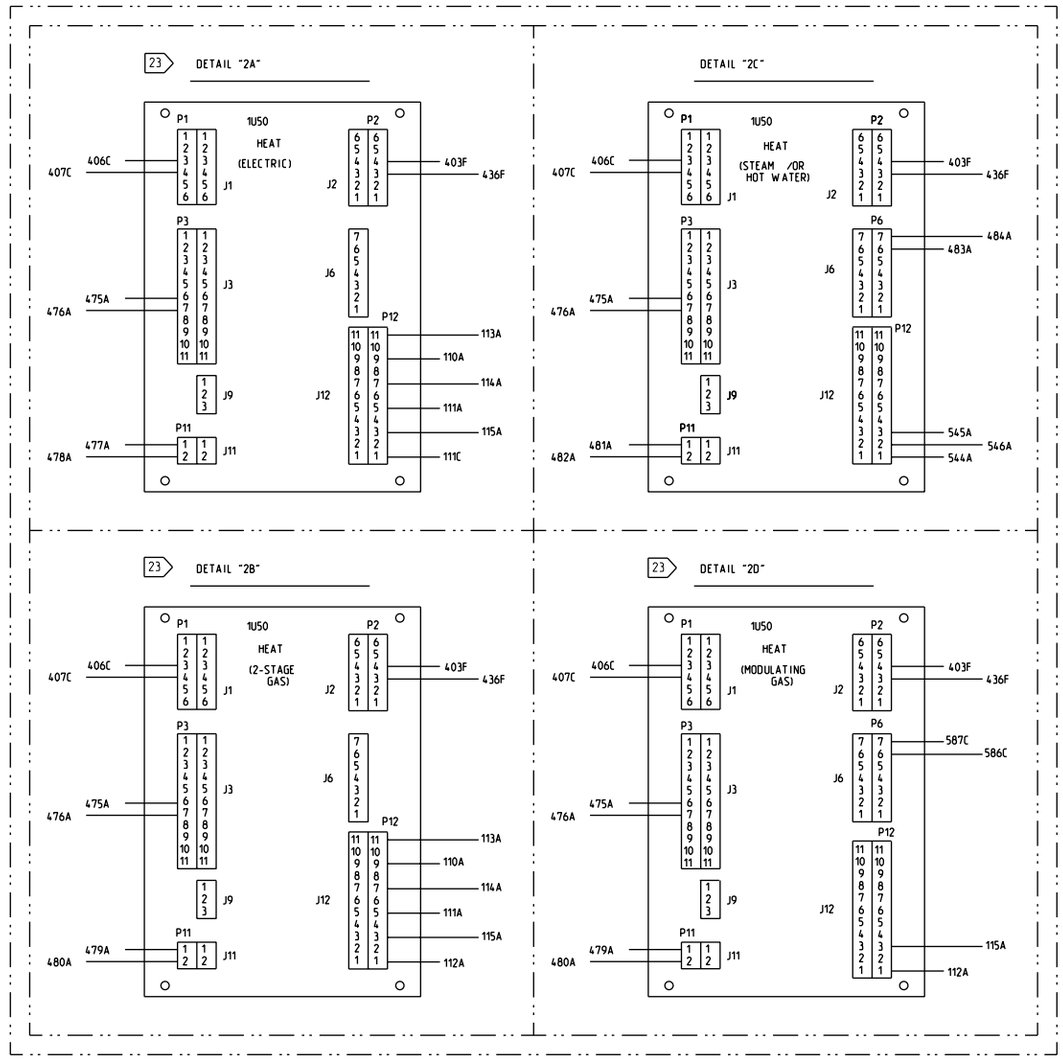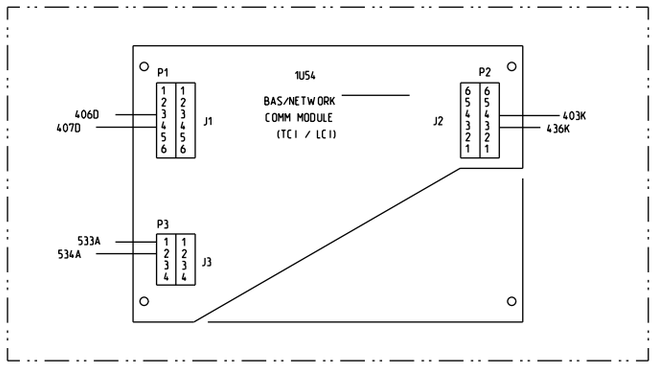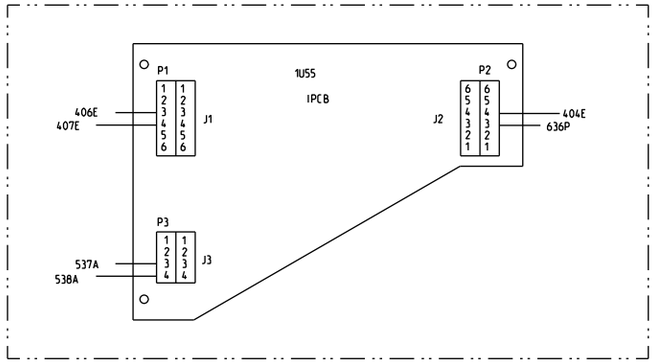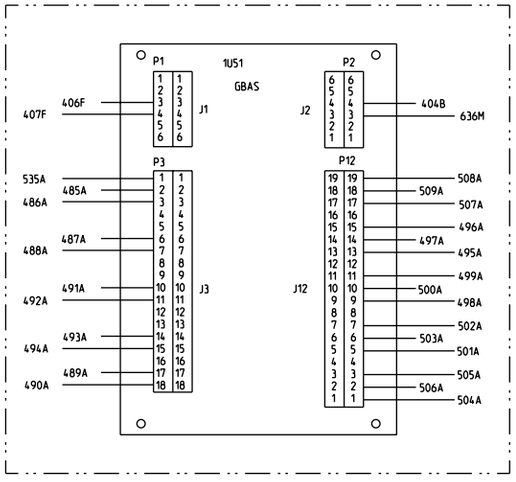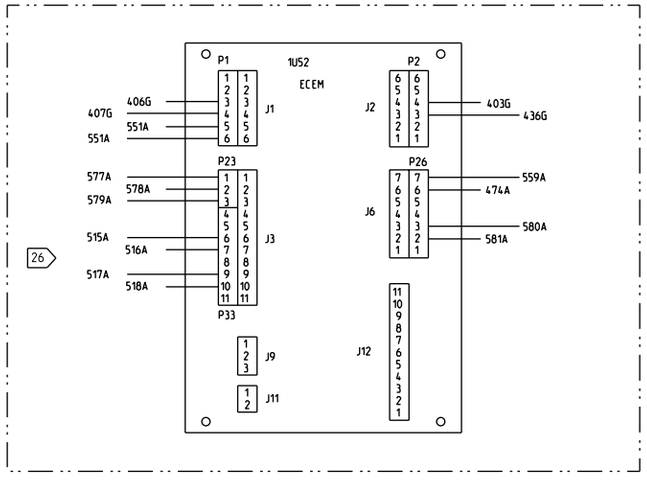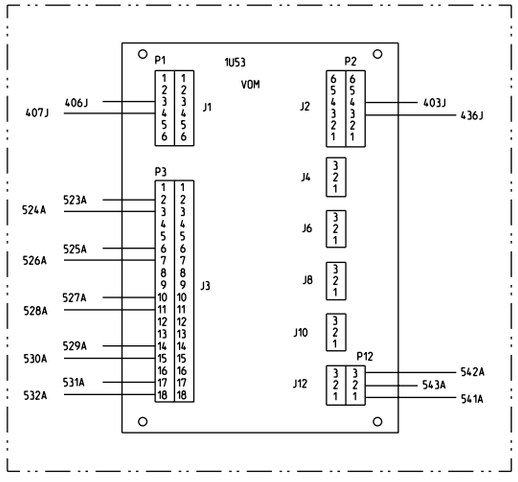
27 WIRE NO S 583A, 584A, 585A, 736D & 574C REQUIRED WITH INLET VANE OPTION ONLY.