10 X 15 METAL PLATE

TRANE	FILE NUMBER: 2313-0092	DRAWING NUMBER: 2309-3038	SHEET: 2 OF 3	REV B
THIS DRAWING IS PROPRIETARY AND SHALL NOT BE COPIED OR ITS CONTENTS DISCLOSED TO OUTSIDE PARTIES WITHOUT THE CONSENT OF TRANE.	ROOFTOP PACKAGED AIR CONDITIONER			
DRAWN BY: B.SMALLING	TRANE® DATE: 07/15/2001	CONNECTION WIRING DIAGRAM UNIT CONTROL MODULE DETAIL 90-130 TON S_HG		
REPLACES:	REVISION DATE:			
CAD SYSTEM USED:	SIMILAR TO: 2307-4063			

⚠ WARNING

HAZARDOUS VOLTAGE!

DISCONNECT ALL ELECTRIC POWER, INCLUDING REMOTE DISCONNECTS, BEFORE SERVICING.

FAILURE TO DISCONNECT POWER BEFORE SERVICING CAN CAUSE SEVERE PERSONAL INJURY OR DEATH.

⚠ AVERTISSEMENT

VOLTAGE HASARDEUX!

DECONNECTEZ TOUTES LES SOURCES ELECTRIQUES INCLUANT LES DISJONCTEURS SITUES A DISTANCE AVANT D'EFFECTUER L'ENTRETIEN.

FAUTE DE DECONNECTEZ LA SOURCE ELECTRIQUE AVANT D'EFFECTUER L'ENTRETIEN PEUT ENTRAINER DES BLESSURES CORPORELLES SEVERES OU LA MORT.

⚠ CAUTION

USE COPPER CONDUCTORS ONLY!

UNIT TERMINALS ARE NOT DESIGNED TO ACCEPT OTHER TYPES OF CONDUCTORS.

FAILURE TO DO SO MAY CAUSE DAMAGE TO THE EQUIPMENT.

IMPORTANT!

DO NOT ENERGIZE UNIT UNTIL CHECK-OUT AND START-UP PROCEDURE HAS BEEN COMPLETED.

NOTES:

21 WIRE NO S 540A & 430A REQUIRED WITH REFERENCE ENTHALPY AND COMPARATIVE ENTHALPY OPTIONS ONLY.

22 WIRE NO S 510A. 511A. 37R & 226A REQUIRED WITH ALL POWER EXHAUST OPTIONS ONLY.

23 REFER TO DETAILS "2A". "2B". "2C" AND "2D" FOR CORRECT HEAT MODULE (1U50) CONNECTIONS.
DETAIL "2A" - ELECTRIC HEAT (SEHF - SEHG)
DETAIL "2B" - 2-STAGE NATURAL GAS HEAT (SFHF - SFHG)
DETAIL "2C" - STEAM OR HOT WATER HEAT (SSHF - SLHF)
DETAIL "2D" - MODULATING NATURAL GAS HEAT (SFHF - SFHG)

25 WIRE NO S 577A. 578A. 579A. 582A. 736J. 580A & 581A REQUIRED WITH 100% POWER EXHAUST WITH STATITRAC OPTION ONLY.

26 WIRE NO S 515A. 516A. 517A & 518A REQUIRED WITH COMPARATIVE ENTHALPY OPTION ONLY.
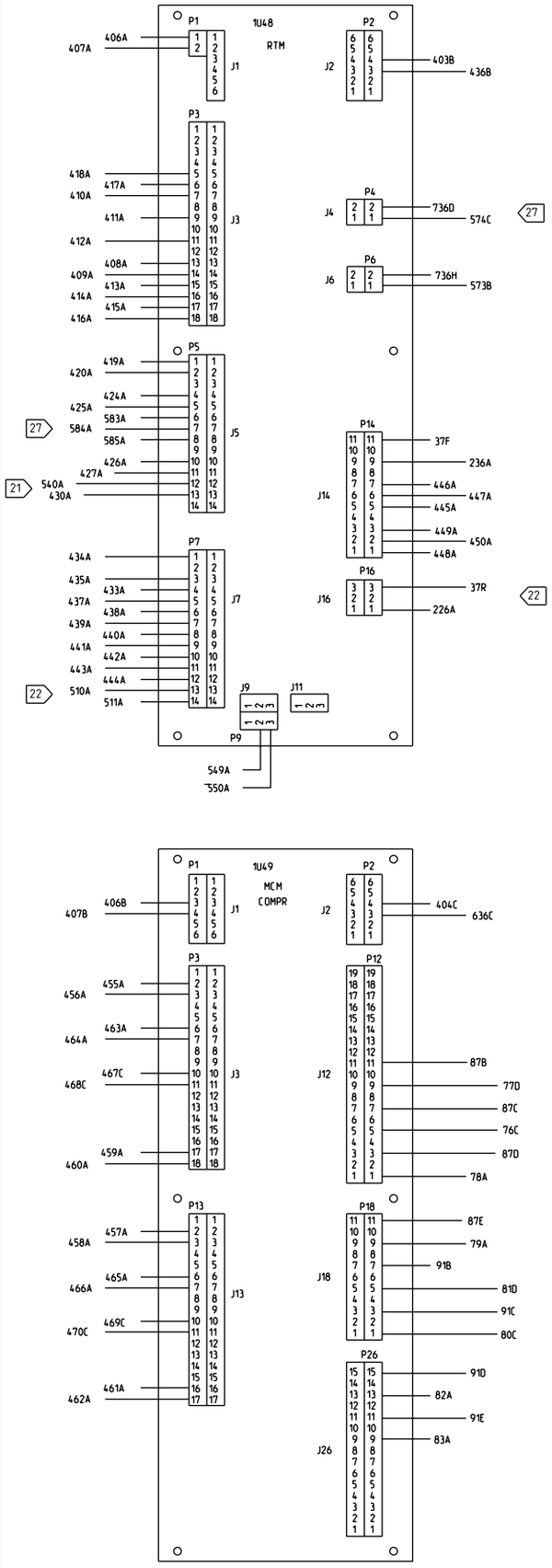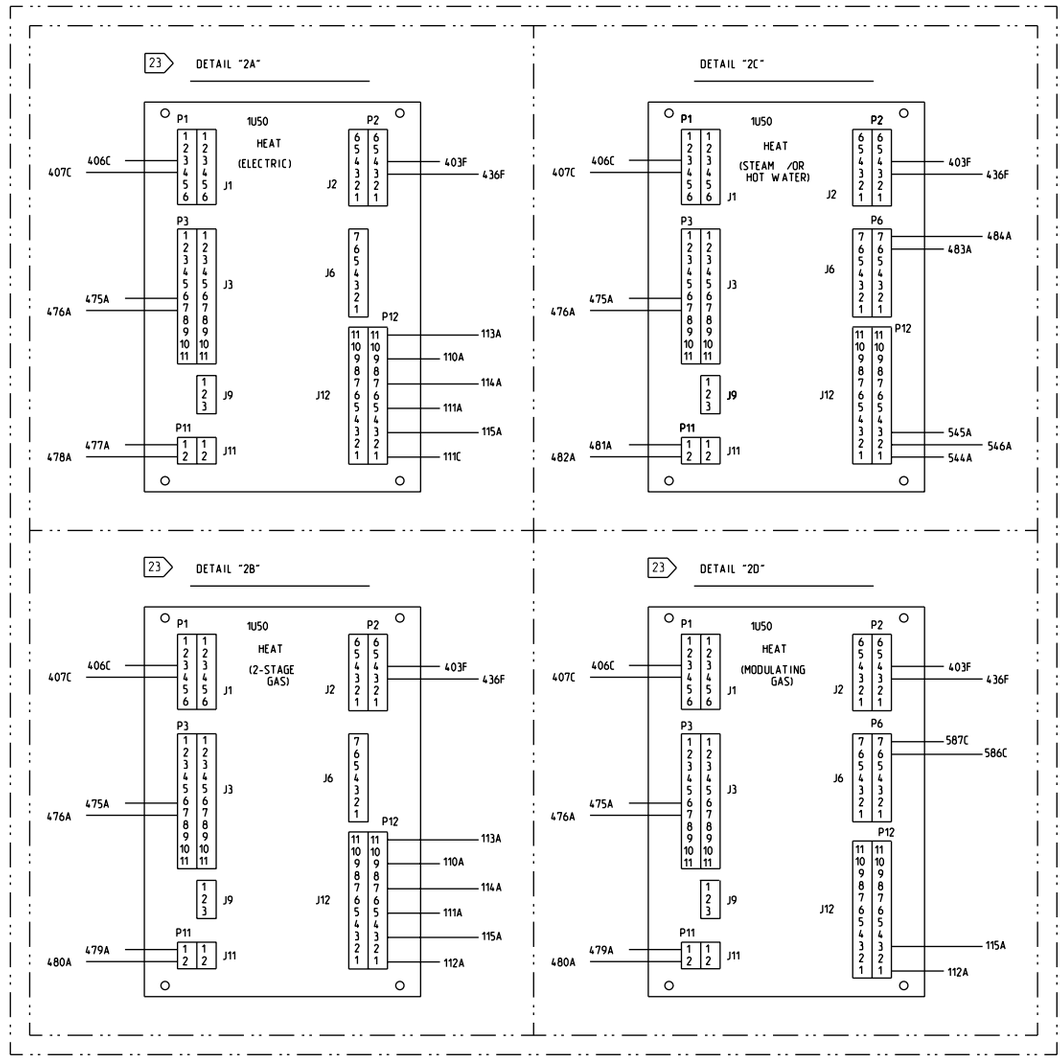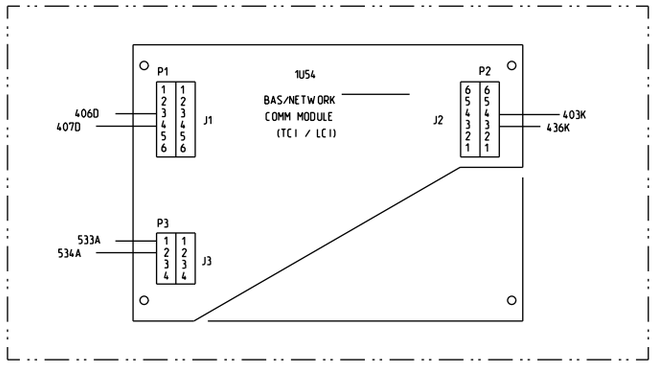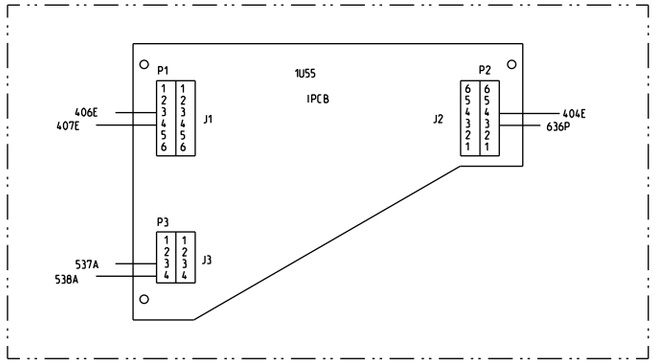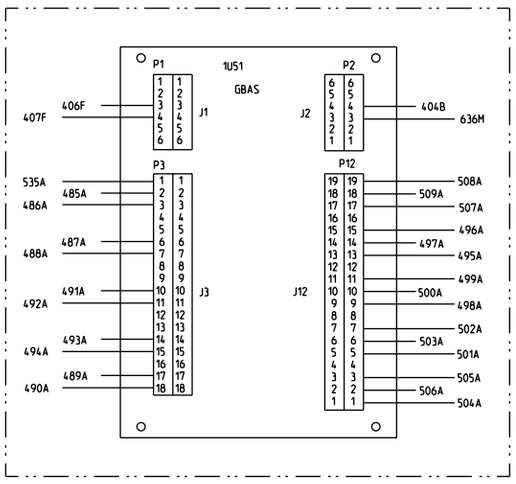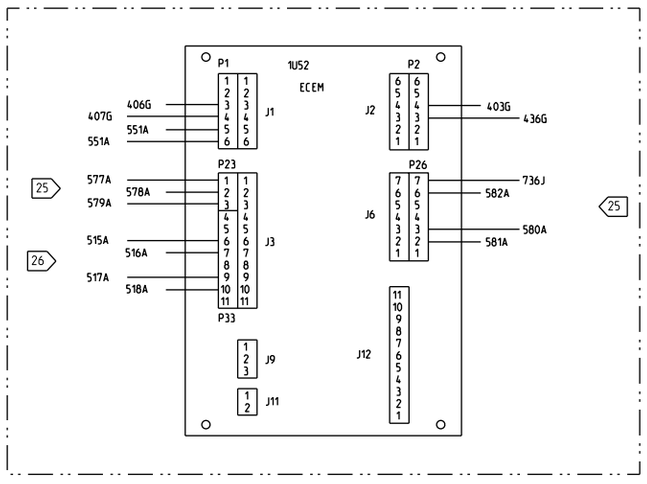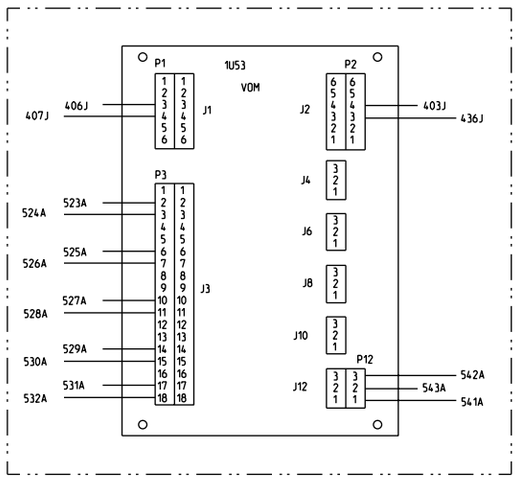
27 WIRE NO S 583A. 584A. 585A. 736D & 574C REQUIRED WITH INLET VANE OPTION ONLY.