TRANE	RTAD 85...125	C	2309–2264
		Date: 24–05–2006 Rev. D	
		CAO	Std

SCHEMA ELECTRIQUE	SCHEMA ELETTRICO
VERDRAHTUNGSSCHEMA	STROOMKRINSCHEMA
WIRING DIAGRAM	ESQUEMA ELECTRICO

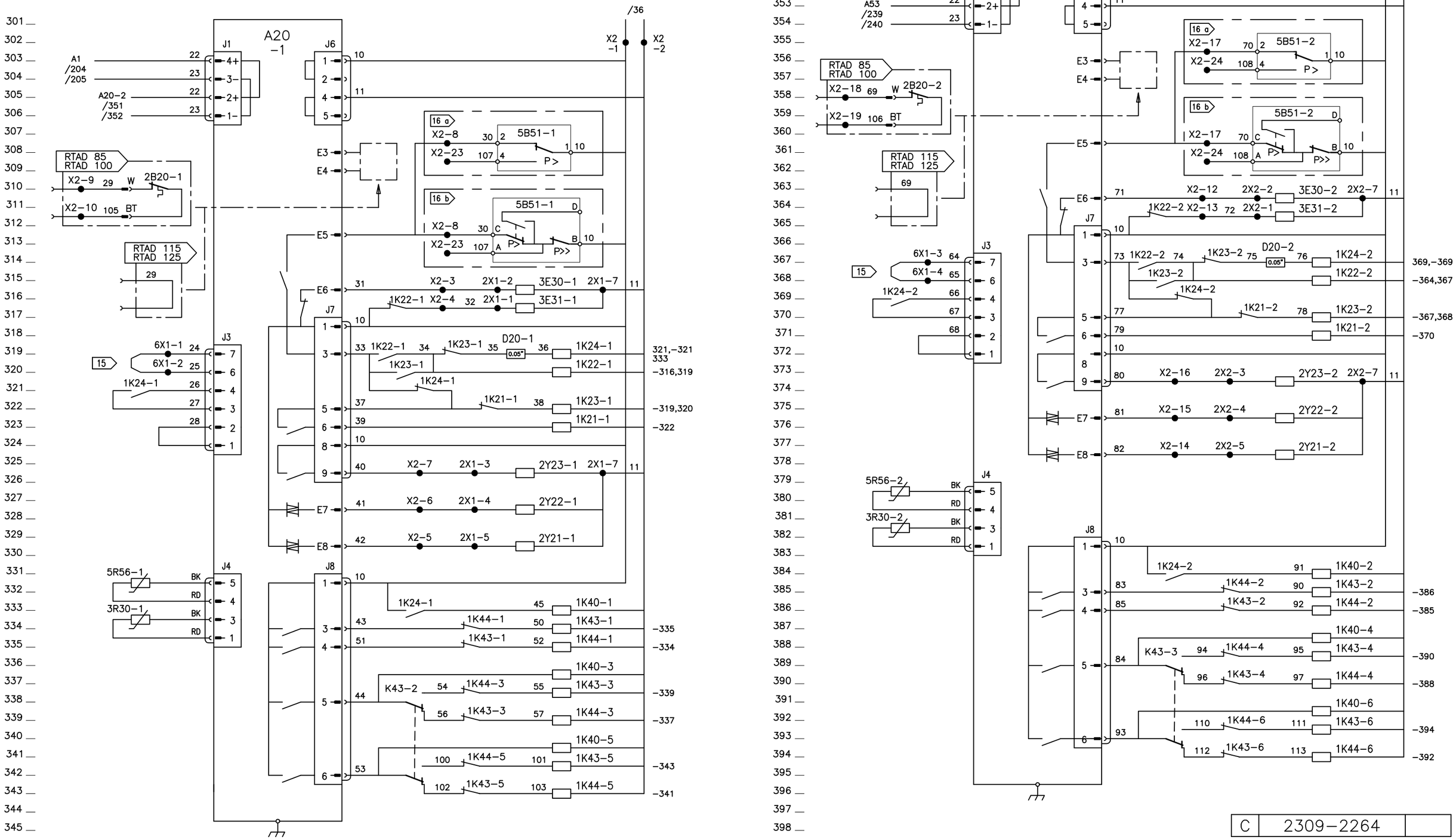

C 2309–2264