TRANE	RTAD 100...150	C	2309–2257
		Date: 24–05–2006 Rev. E	
		CAO	Std
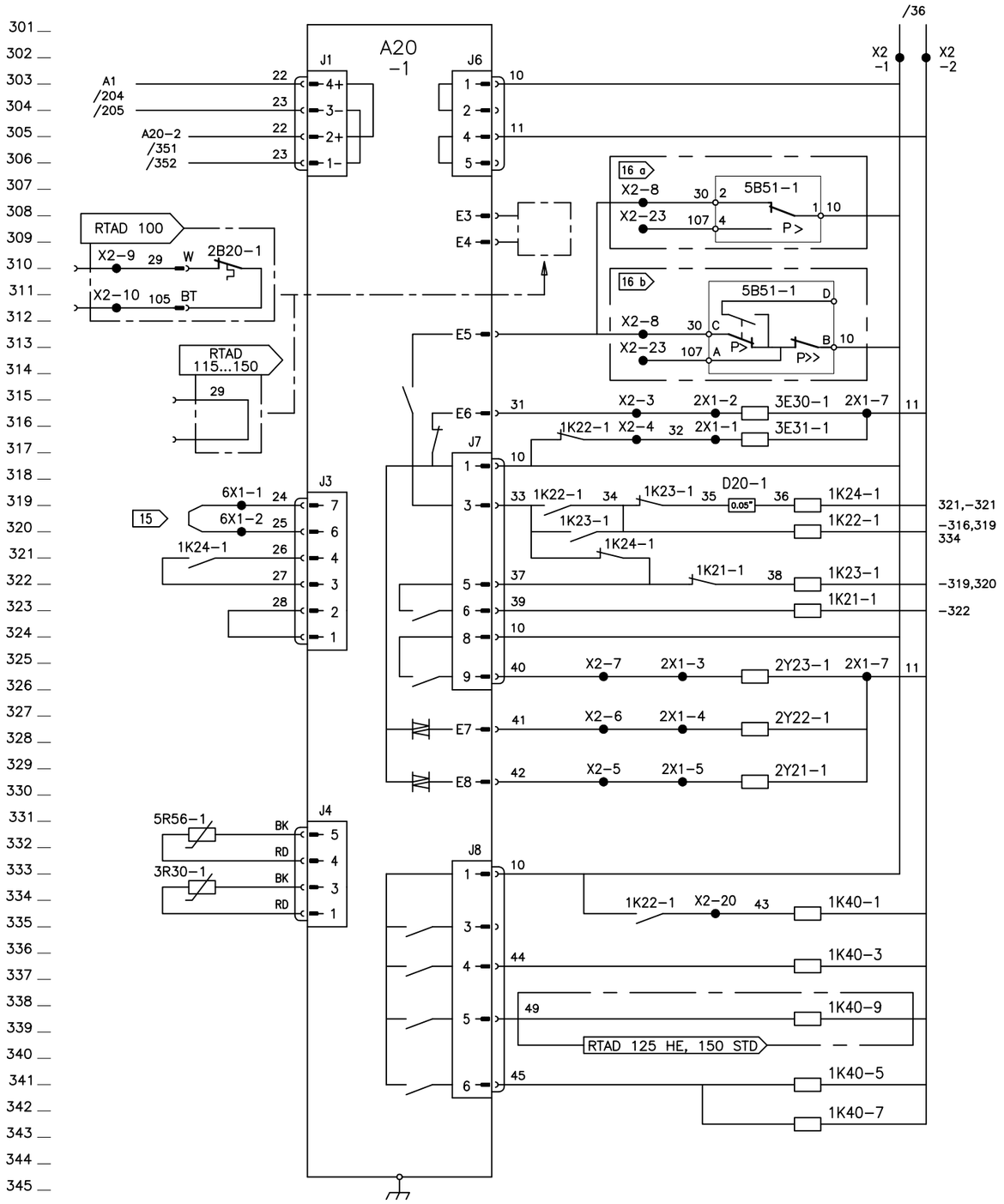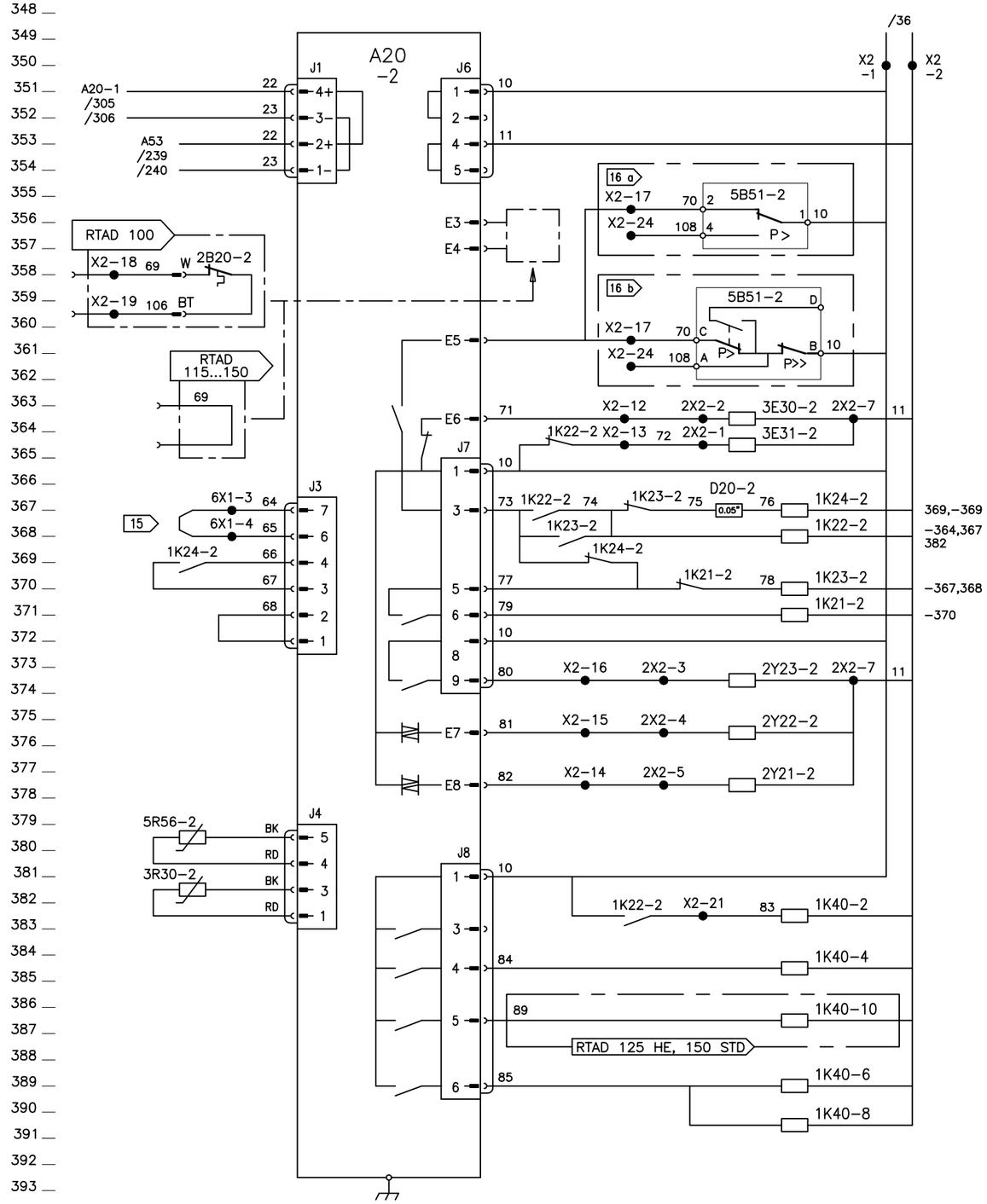
SCHEMA ELECTRIQUE	SCHEMA ELETTRICO
VERDRAHTUNGSSCHEMA	STROOMKRINSCHEMA
WIRING DIAGRAM	ESQUEMA ELECTRICO