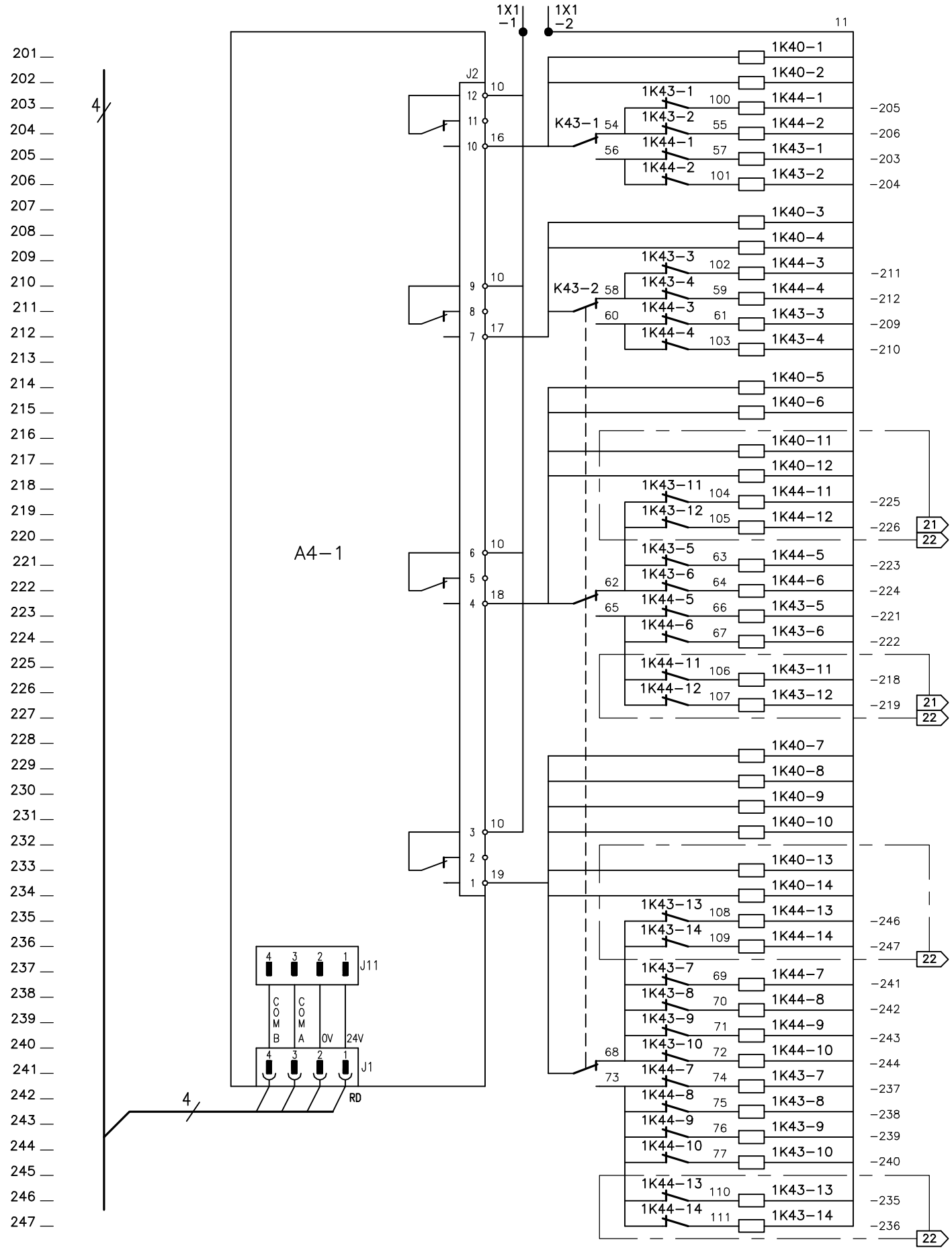| TRANE | RTAC 250 HE...400 | D 2309–1668 | |
|---|---|---|---|
| | | Date: 10–11–2000 Rev. / | |
| | | CAO | Std |
| CIRCUIT 1 | KREIS 1 | CIRCUITO 1 | |