TRANE	HFH Hôtel 2	D 2309–1331	1/1
		Date: 14–01–04	REV. A
		CAO	Std

SCHEMA ELECTRIQUE	SCHEMA ELETTRICO
VERDRAHTUNGSSCHEMA	STROOMKRINSCHEMA
WIRING DIAGRAM	ESQUEMA ELECTRICO

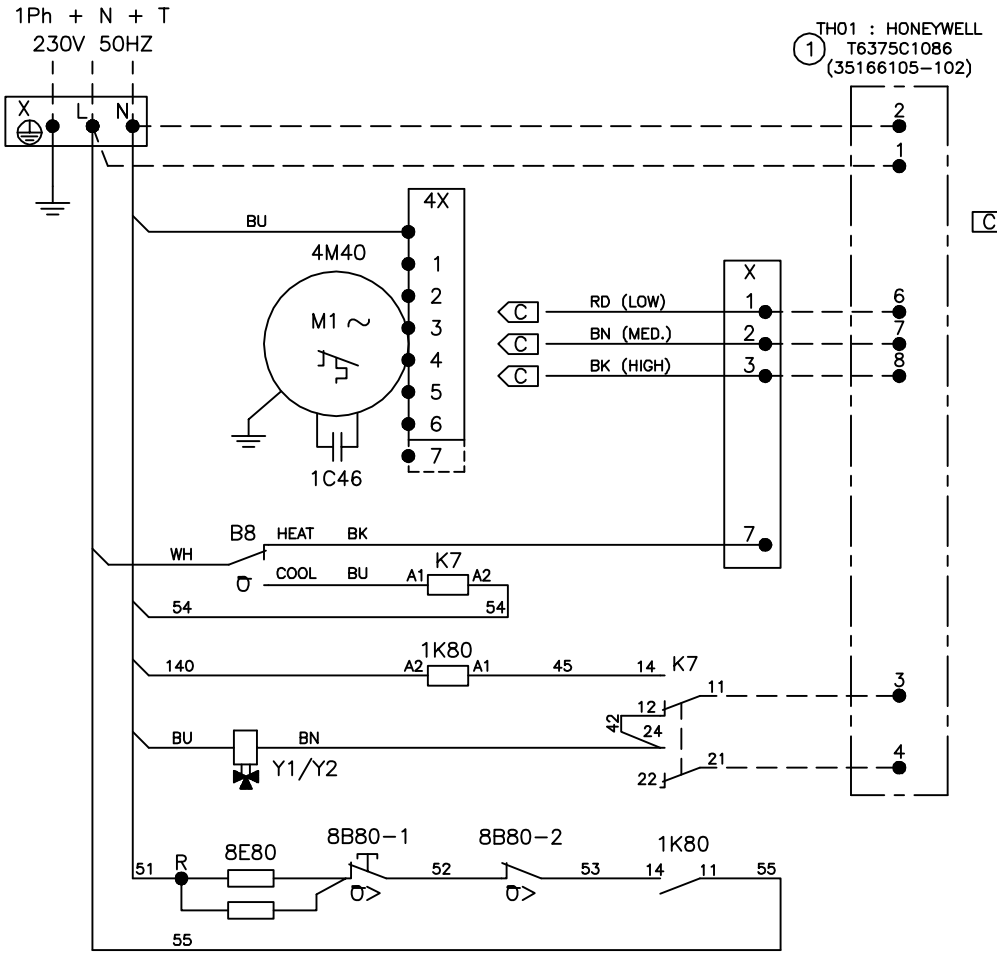

–CÂBLAGE UNITE STANDARD
–STANDARD MASCHINE VERDRAHTUNG
–UNIT STANDARD WIRING
–UNITA STANDARD CABLAGGIO
–STANDAARD BEDRADING UNIT
–CABLEADO UNIDAD STANDARD

	4X1	4X2	4X3	4X4	4X5	4X6	4X7
#02		BK		BN		RD	
#03		BK		BN		RD	
#04			BK		BN		RD

CODE COULEUR FARBMARKIERUNG COLOUR CODE		
BK: NOIR	SCHWARZ	BLACK
BN: BRUN	BRAUN	BROWN
BU: BLEU	BLAU	BLUE
RD: ROUGE	ROT	RED
WH: BLANC	WEISS	WHITE

CODICE COLORE KLEURCODERING CODIGO COLORES		
BK: NERO	ZWART	NEGRO
BN: MARRONE	BRUIN	MARRON
BU: BLU	BLAUW	AZUL
RD: ROSSO	ROOD	ROJO
WH: BIANCO	WIT	BLANCO

ITEM	FRANCAIS	DEUTSCH	ENGLISH
4X...	BORNIER MOTEUR	VERDICHTERMOTOR–KLEMMLEISTE	MOTOR TERMINAL BLOCK
X...	BORNIER UNITE	HAUPTKLEMMLEISTE	UNIT TERMINAL BLOCK
4M40	MOTEUR VENTILATEUR	MOTOR, VENTILATOR	FAN MOTOR
1C46	CONDENSATEUR VENTILATEUR	KONDENSATOR, INNENVENTILATOR	FAN MOTOR CAPACITOR
1K80	CONTACTEUR BATTERIE ELECTRIQUE	SCHUETZ, ELECTROHEIZUNG	HEATING COIL CONTACTOR
8B80	CONTROLE TEMP. BATTERIE ELECTR.	TEMPERATURSCHALTER, ELECTROHEIZUNG	ELEC HEAT HIGH LIMIT PROTECT
8E80	BATTERIE ELECTRIQUE	ELEKTROHEIZREGISTRER	ELECTRIC HEATER
B8	SONDE CHANGE–OVER AUTOMATIQUE	AUTOMAT. UMSCHALTUNG FUEHLER	AUTOMATIC CHANGE–OVER SENSOR
Y1	VANNE D'EAU FROIDE	KALTWASSER VENTIL	COOLING VALVE
Y2	VANNE D'EAU CHAUDE	WARMWASSER VENTIL	HEATING VALVE
K7	RELAIS MODE FROID	RELAIS,KUEHLEN	COOLING RELAY

REPERE	OPTIONS	ZUBEHOER	OPTIONS
1 TH01	THERMOSTAT MURAL	RAUM–THERMOSTATSET	WALL THERMOSTAT

———	CABLAGE TRANE	TRANE VERDRAHTUNG	TRANE WIRING
– – –	CABLAGE CLIENT	VERDRAHTUNG DURCH KUNDEN	CUSTOMER WIRING

ITEM	ITALIANO	NEDERLANDS	ESPANOL
4X...	TERMINALI MOTORE	MOTOR AANSLUITKLEMMEN BLOK	TERMINAL MOTOR
X...	TERMINALI UNITÀ	UNIT ANNSLUITKLEMMEN BLOCK	TERMINAL UNIDAD
4M40	MOTOR VENTILATORE	VENTILATORMOTOR	MOTOR VENTILADOR
1C46	CONDENSATORE VENTILATORE	START CONDENSATOR VENTILATOR	CONDENSADOR VENTILADOR
1K80	CONTATTORE BATTERIA ELEKTRICA	MAGNEETSCHAKELAAR ELEK. UERWARMING	CONTACTOR BATERIA ELECTRICA
8B80	REGOLAZIONE TEMP. BATT.ELET.	ELEKTRISCHVERWARMINGTEMP. BEVEIL.	CONTROL TEMP. BATERIA ELECTRICA
8E80	BATTERIA ELETRICA	VERWARMINGSBATTERIJ–ELEKTRISCH	BATERIA ELECTRICA
B8	SONDA DEL SISTEMA DI INVERS. DI CICLI	AUTOMATISCHE CHANGE–OVER SENSOR	SENSOR DE CAMBIO AUTOMATICO
Y1	VALVOLA ACQUA RAFFREDDAMENTO	KOELING WATERREGELKLEP	VALVULA DE AGUA FRIO
Y2	VALVOLA ACQUA RISCALDAMENTO	VERWARMING WATERREGELKLEP	VALVULA DE AGUA CALOR
K7	RELAIS MODE RAFFREDDAMENTO	KOELINGRELAIS	RELE MODO FRIO

REPERE	OPZIONI	TOEBEHOREN	OPCIONES
1 TH01	TERMOSTATO MURALE	MUURTHERMOSTAAT	TERMOSTATO MURAL

———	CABLAGGIO TRANE	DOOR TRANE BEDRAAD	CABLEADO TRANE
– – –	CABLAGGIO CLIENTE	DOOR KLANT BEDRAAD	CABLEADO CLIENTE