TRANE	HFO/R	D 2309-1315 1/1
		Date: 18-04-05 REV. B
		CAO Std

SCHEMA ELECTRIQUE	SCHEMA ELETTRICO
VERDRAHTUNGSSCHEMA	STROOMKRINSCHEMA
WIRING DIAGRAM	ESQUEMA ELECTRICO

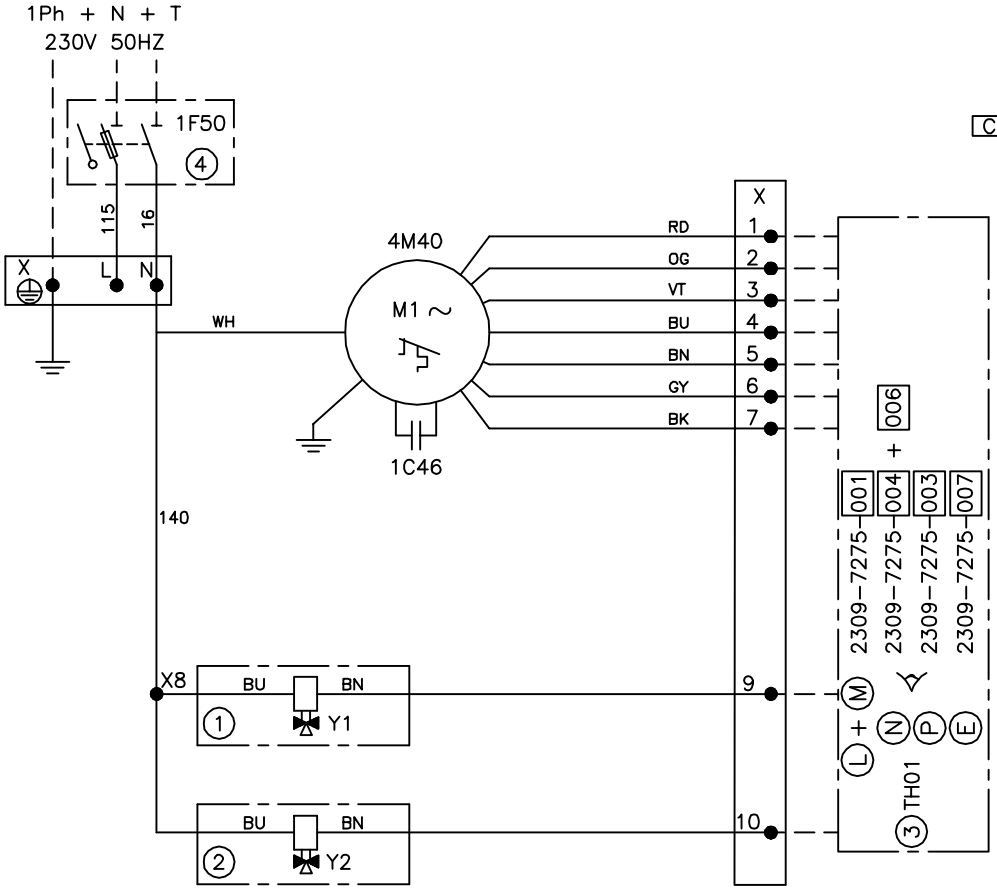

C

-CÂBLAGE UNITE STANDARD
-STANDARD MASCHINE VERDRAHTUNG
-UNIT STANDARD WIRING
-UNITA STANDARD CABLAGGIO
-STANDAARD BEDRADING UNIT
-CABLEADO UNIDAD STANDARD

	X1	X2	X3	X4	X5	X6	X7
#04		L	M			H	
#06			L		M		H
#08			L			M	H

CODE COULEUR FARBMARKIERUNG COLOUR CODE		
BK: NOIR	SCHWARZ	BLACK
BN: BRUN	BRAUN	BROWN
BU: BLEU	BLAU	BLUE
GN: VERT	GRUEN	GREEN
GY: GRIS	GRAU	GRAY
OG: ORANGE	ORANGE	ORANGE
RD: ROUGE	ROT	RED
VT: VIOLET	VIOLETT	PURPLE
WH: BLANC	WEISS	WHITE

CODICE COLORE KLEURCODERING CODIGO COLORES		
BK: NERO	ZWART	NEGRO
BN: MARRONE	BRUIN	MARRON
BU: BLU	BLAUW	AZUL
GN: VERDE	GROEN	VERDE
GY: GRIGIO	GRIJS	GRIS
OG: ARANCIONE	ORANJE	NARANJA
RD: ROSSO	ROOD	ROJO
VT: VIOLA	PAARS	VIOLETA
WH: BIANCO	WIT	BLANCO

ITEM	FRANCAIS	DEUTSCH	ENGLISH
X...	BORNIER UNITE	HAUPTKLEMMLEISTE	UNIT TERMINAL BLOCK
4M40	MOTEUR VENTILATEUR	MOTOR, VENTILATOR	FAN MOTOR
1C46	CONDENSATEUR VENTILATEUR	KONDENSATOR, INNENVENTILATOR	FAN MOTOR CAPACITOR

REPERE	OPTIONS	ZUBEHOER	OPTIONS
① (Y1)	VANNE D'EAU FROIDE	KALTWASSER VENTIL	COOLING VALVE
② (Y2)	VANNE D'EAU CHAUDE	WARMWASSER VENTIL	HEATING VALVE
③ TH01	THERMOSTAT MURAL	RAUM-THERMOSTATSET	WALL THERMOSTAT
④ 1F50	FUSIBLE UNITE	SICHERUNG MASCHINE	UNIT FUSE

———	CABLAGE TRANE	TRANE VERDRAHTUNG	TRANE WIRING
— — —	CABLAGE CLIENT	VERDRAHTUNG DURCH KUNDEN	CUSTOMER WIRING

ITEM	ITALIANO	NEDERLANDS	ESPANOL
X...	TERMINALI UNITÀ	UNIT ANNSLUITKLEMMEN BLOCK	TERMINAL UNIDAD
4M40	MOTOR VENTILATORE	VENTILATORMOTOR	MOTOR VENTILADOR
1C46	CONDENSATORE VENTILATORE	START CONDENSATOR VENTILATOR	CONDENSADOR VENTILADOR

REPERE	OPZIONI	TOEBEHOREN	OPCIONES
① (Y1)	VALVOLA ACQUA RAFFREDDAMENTO	KOELING WATERREGELKLEP	VALVULA DE AGUA FRIO
② (Y2)	VALVOLA ACQUA RISCALDAMENTO	VERWARMING WATERREGELKLEP	VALVULA DE AGUA CALOR
③ TH01	TERMOSTATO MURALE	MUURTHERMOSTAAT	TERMOSTATO MURAL
④ 1F50	FUSIBILE UNITA	UNITBEVEILIGING	FUSIBLE UNIDAD

———	CABLAGGIO TRANE	DOOR TRANE BEDRAAD	CABLEADO TRANE
— — —	CABLAGGIO CLIENTE	DOOR KLANT BEDRAAD	CABLEADO CLIENTE