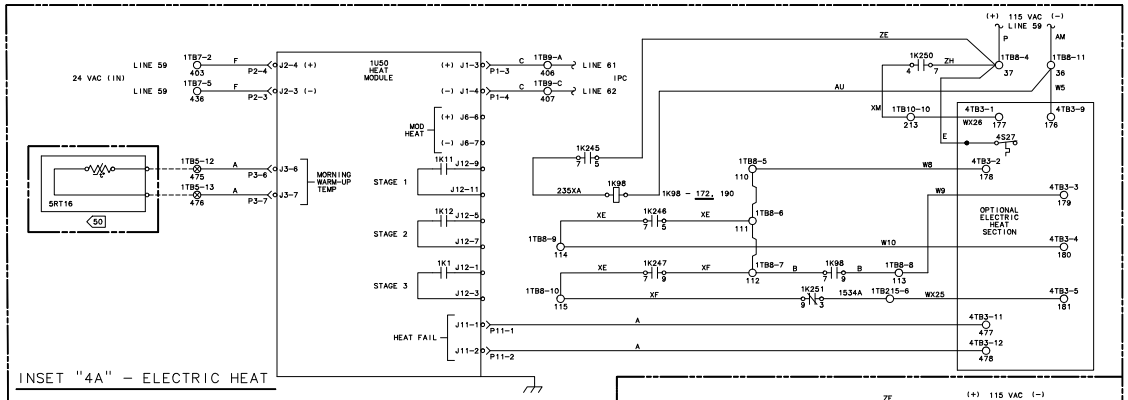

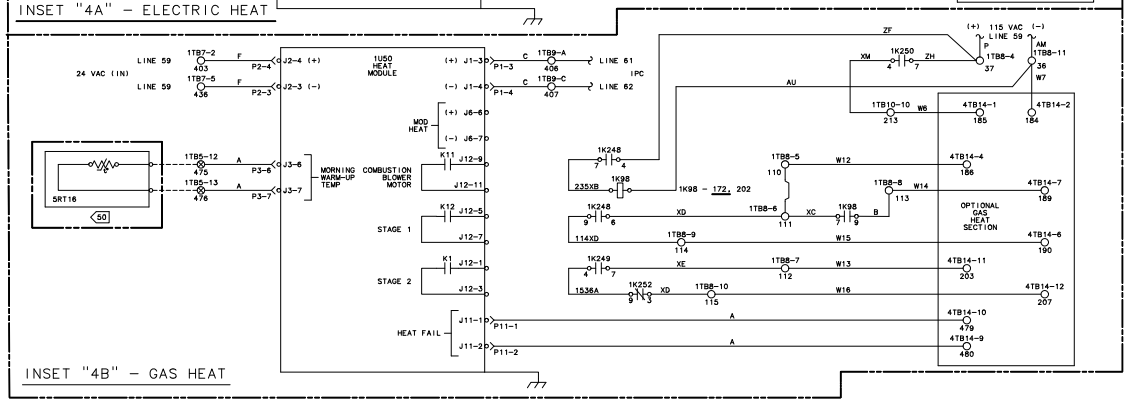

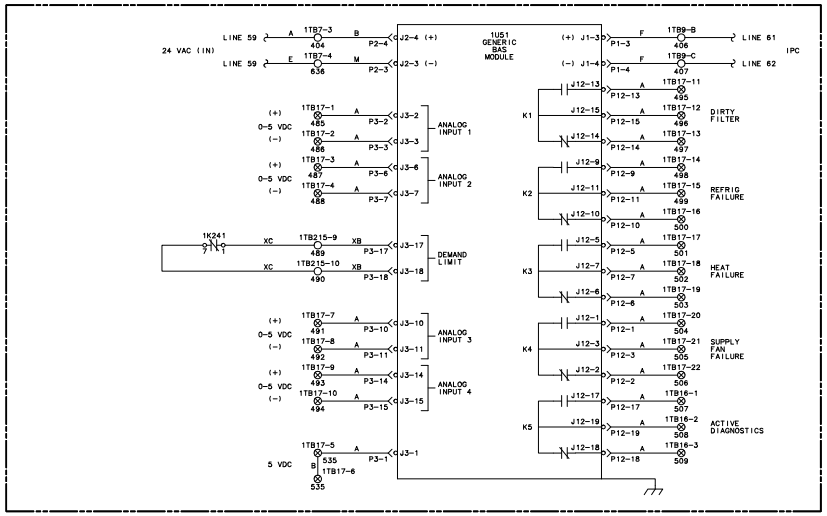

NOTES:

50 5RT16, OPTIONAL MORNING WARM-UP TEMP SENSOR, IS USED FOR MORNING WARM-UP CONTROL ON UNITS WITH HEATING OPTION.

⚠ WARNING

HAZARDOUS VOLTAGE!

DISCONNECT ALL ELECTRIC POWER INCLUDING REMOTE DISCONNECTS BEFORE SERVICING.

FAILURE TO DISCONNECT POWER BEFORE SERVICING CAN CAUSE SEVERE PERSONAL INJURY OR DEATH.

⚠ AVERTISSEMENT

VOLTAGE HASARDEUX!

DECONNECTEZ TOUTES LES SOURCES ELECTRIQUES INCLUANT LES DISJONCTEURS SITUES A DISTANCE AVANT D'EFFECTUER L'ENTRETIEN.

FAUTE DE DECONNECTER LA SOURCE ELECTRIQUE AVANT D'EFFECTUER L'ENTRETIEN PEUT ENTRAINER DES BLESSURES CORPORELLES SEVERES OU LA MORT.

⚠ CAUTION

USE COPPER CONDUCTORS ONLY!

UNIT TERMINALS ARE NOT DESIGNED TO ACCEPT OTHER TYPES OF CONDUCTORS.

FAILURE TO DO SO MAY CAUSE DAMAGE TO THE EQUIPMENT.

10 X 15

REPLACES:

REVISION DATE:

DRAWN BY: C. MOORE

DATE: 7-7-99

C.A.D./C.A.M.

THE TRANE COMPANY

THIS DRAWING IS PROPERTY OF THE TRANE COMPANY AND SHALL NOT BE REPRODUCED OR COPIED WITHOUT WRITTEN PERMISSION.

STATEMENT OF OWNERSHIP 2308-1355 B

FILE NUMBER:

ROOFTOP PACKAGED AIR CONDITIONER
SCHEMATIC DIAGRAM
ROOFTOP UNIT
KROOB, S DESIGN
20 - 75 TON S-H

DRAWING NUMBER: 2308-2352

SHT 4 OF 5

REV: B