⚠ WARNING

HAZARDOUS VOLTAGE!

DISCONNECT ALL ELECTRIC POWER INCLUDING REMOTE DISCONNECTS BEFORE SERVICING.

FAILURE TO DISCONNECT POWER BEFORE SERVICING CAN CAUSE SEVERE PERSONAL INJURY OR DEATH.

⚠ AVERTISSEMENT

VOLTAGE HASARDEUX!

DECONNECTEZ TOUTES LES SOURCES ELECTRIQUES INCLUANT LES DISJONCTEURS SITUES A DISTANCE AVANT D'EFFECTUER L'ENTRETIEN.

FAUTE DE DECONNECTER LA SOURCE ELECTRIQUE AVANT D'EFFECTUER L'ENTRETIEN PEUT ENTRAINER DES BLESSURES CORPORELLES SEVERES OU LA MORT.

⚠ CAUTION

USE COPPER CONDUCTORS ONLY!

UNIT TERMINALS ARE NOT DESIGNED TO ACCEPT OTHER TYPES OF CONDUCTORS.

FAILURE TO DO SO MAY CAUSE DAMAGE TO THE EQUIPMENT.

DEVICE PREFIX LOCATION CODE	
AREA	LOCATION
1	INSIDE UNIT CONTROL BOX
2	CONDENSER SECTION
3	AIR HANDLER SECTION
4	HEATING SECTION
5	EXTERNAL FIELD MTD DEVICE

NOTES:

1. UNLESS OTHERWISE NOTED, ALL SWITCHES ARE SHOWN AT 25°C (77°F), AT ATMOSPHERIC PRESSURE, AT 50% RELATIVE HUMIDITY, WITH ALL UTILITIES TURNED OFF, AND AFTER A NORMAL SHUTDOWN HAS OCCURRED.
2. DASHED LINES INDICATE RECOMMENDED FIELD WIRING BY OTHERS. DASHED LINE ENCLOSURES AND/OR DASHED DEVICE OUTLINES INDICATE COMPONENTS PROVIDED BY THE FIELD. PHANTOM LINE ENCLOSURES INDICATE ALTERNATE CIRCUITRY OR AVAILABLE SALES OPTIONS. SOLID LINE INDICATES WIRING BY TRANE CO.
3. NUMBERS ALONG THE RIGHT SIDE OF THE SCHEMATIC DESIGNATE THE LOCATION OF CONTACTS BY LINE NUMBER. AN UNDERLINED NUMBER INDICATES A NORMALLY CLOSED CONTACT. AN OPEN ARROWHEAD BELOW THE LINE NUMBER POINTING UPWARD INDICATES A TIMED CONTACT WHICH BEGINS TIMING WHEN ENERGIZED.

4 SEE APPLICABLE HEATING SECTION DIAGRAM FOR BALANCE OF CIRCUIT.

5 IF4,IF5,IF6,IK4,IK6,IK9,IKI0,ICBI0,ICBII,2B4,2B5,2B8,2BI8, AND ASSOCIATED WIRING USED ON 40 THRU 60 TON UNITS ONLY.

6 200V/60HZ OR 575V/60HZ TRANSFORMER SHOWN. SEE INSET "1A" FOR 460V/60HZ, 230V/60HZ, 380V/50HZ OR 415V/50HZ CONNECTIONS.

7 2B3 AND ASSOCIATED WIRING USED ON 25, 30 & 50 THRU 60 TON UNITS ONLY.

8 2B6 AND ASSOCIATED WIRING USED ON 50 THRU 60 TON UNITS ONLY.

12 230V/60HZ, 380V/50HZ, 415V/50HZ OR 575V/60HZ TRANSFORMERS SHOWN. SEE INSET "1B" FOR 200V/60HZ OR 460V/60HZ CONNECTIONS.

13 230V/60HZ, 575V/60HZ TRANSFORMERS SHOWN. SEE INSET "1C" FOR 200V/60HZ AND 460V/60HZ TRANSFORMERS.

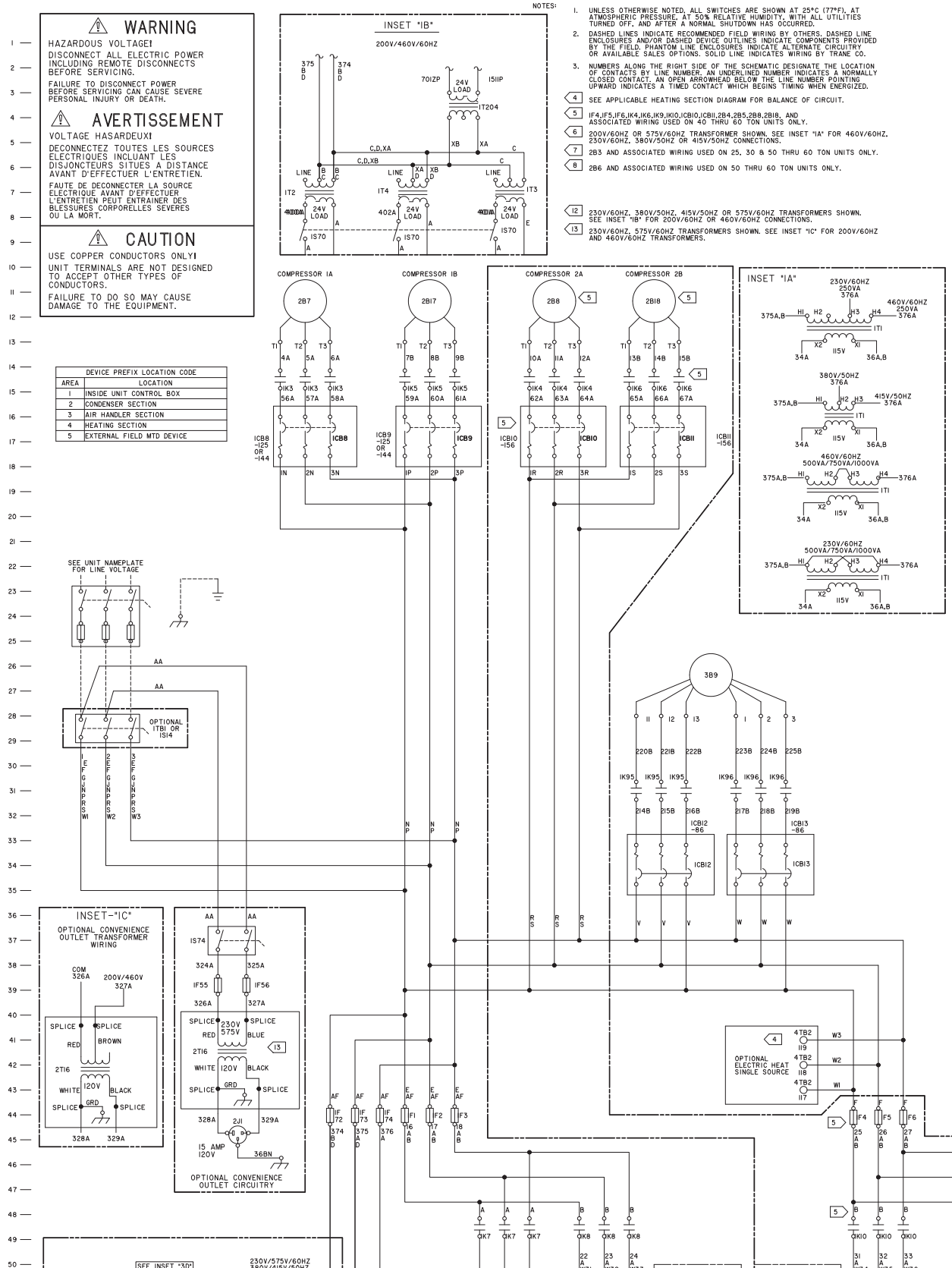

LEGEND		
DEVICE DESIGNATION	DESCRIPTION	LINE NUMBER
ICB8 - ICBII	COMPR CIRCUIT BREAKER	34
ICBI2,ICBI3	SUPPLY FAN BREAKERS	33
IDL14	TIME DELAY RELAY	88
IF1 - IF6	CONDENSER FAN FUSE	44
IF7	CONTROL CIRCUIT FUSE	58
IF44,IF45	COMPR PROTECTOR FUSE	125,144,156
IF55,IF56	CONVENIENCE OUTLET FUSE	39
IF72 - IF74	TRANSFORMER CIRCUIT FUSE	44
IK3,IK4	COMPRESSOR CONTACTOR	127,146,158
IK5,IK6	COMPRESSOR CONTACTOR	123,142,154
IK7,IK8	CONDENSER FAN CONTACTOR	129,1U48,150
IK9,IKI0	CONDENSER FAN CONTACTOR	160,162
IK95	SPLY FAN CONTACTOR (HIGH)	86
IK96	SPLY FAN CONTACTOR (LOW)	88
IK97	SPLY FAN SPEED RELAY	173
IK98	HEAT RELAY	187,201
IK240	CLG STAGE 1 RELAY	124
IK241	CLG STAGE 2 RELAY	126
IK242	CLG STAGE 3 RELAY	128
IK243	CLG STAGE 4 RELAY	130
IK244	SUPPLY FAN ENABLE RELAY	132
IK245	HTG STAGE 1 RELAY (ELEC)	124
IK246	HTG STAGE 2 RELAY (ELEC)	126
IK247	HTG STAGE 3 RELAY (ELEC)	128
IK248	HTG STAGE 1 RELAY (GAS)	130
IK249	HTG STAGE 2 RELAY (GAS)	132
IK250	SPLY FAN/HEAT RELAY	86
IK251	HEAT CONTROL RELAY	126
IK252	HEAT CONTROL RELAY	128
IK253	SPLY FAN SPEED RELAY	171
IR210,211,212	ZONE TEMP/CLG SETPT RESISTOR	65,66,67
IS1	CONTROL CIRCUIT SWITCH	58
IS14	MANUAL DISCONNECT SWITCH	28
IS70	24 VOLT TRANSFORMER SW	57
IS74	CONV. OUTLET SWITCH	37
IT1	CONTROL POWER TRANSFORMER	55
IT2,IT3,IT4	24 VOLT TRANSFORMER	56
IT204	RELAY POWER TRANSFORMER	52
ITB1	POWER TERMINAL BLOCK	28
ITB4,5,16,17	CONT TERM BLOCK (CUSTOMER)	
ITB6 - ITBI0	CONT TERM BLOCK (FACTORY)	
ITB215,216	CONT TERM BLOCK (FACTORY)	
IU48	ROOFTOP MODULE	61
IU49	COMPRESSOR MODULE	121,140
IU50	HEAT MODULE	182,196,210
IU51	GENERIC B.A.S. MODULE	223
IU52	EXH/COMP ENTHALPY MODULE	242
IU54	TRANE COMM INTERFACE MOD	272
IU55	INTERPRO COMM BRIDGE MOD	279
IU65	HUMAN INTERFACE MODULE	286
2B1 - 2B6	CONDENSER FAN MOTOR	55
2B7,8,17,18	COMPRESSOR	23
2B7S1,2BI7S2	COMPR WINDING T-STAT	125,144
2B8S3,2BI8S4	COMPR WINDING T-STAT	156
2J1	CONVENIENCE OUTLET	45
2RT1,2RT2	SAT COND TEMP SENSOR	127,146,158
2S2,2S3	HIGH PRESS CUTOUT	125,144,156
2S4,2S5	LOW PRESS CUTOUT	125,144,156
2T16	CONV. OUTLET TRANSFORMER	42
2U84	LOW AMBIENT DAMPER ACT #1	133,152
2U85	LOW AMBIENT DAMPER ACT #2	164
3B9	SUPPLY FAN MOTOR	22
3L21	SPACE PRESS CALIBRATED SOL	253
3RT3	OUTDOOR AIR TEMP SENSOR	100
3RT6	RETURN AIR TEMP SENSOR	251
3RT9	SUPPLY AIR TEMP SENSOR	91
3RT14,3RT15	EVAPORATOR TEMP SENSOR	123,142,154
3S16	R/A HIGH DUCT TEMP T-STAT	106
3S17	S/A HIGH DUCT TEMP T-STAT	106
3S21	FILTER SWITCH	117
3S68	SPLY AIRFLOW PROVING SW	113
3S69	EXH AIRFLOW PROVING SW	115
3U12	100% EXHAUST ACTUATOR	72,250
3U13	ECONOMIZER ACTUATOR	72
3U17	VAV INLET VANE ACTUATOR	66
3U60	S/A DUCT PRESS TRANSDUCER	95
3U62	SPACE PRESS TRANSDUCER	249
3U63	O/A HUMIDITY SENSOR	104
3U64	R/A HUMIDITY SENSOR	254
4TB2,4TB3	TERM BLOCK-ELEC HT SECT	
4TB14	TERM BLOCK-GAS HT SECT	
5K86	OCCUPIED/UNOCCUPIED RELAY	112
5K87	VAV CHANGEOVER RELAY	119
5K89	DEMAND LIMIT RELAY	231
5RT16	MORNING WARM-UP TEMP SENSOR	187,201,215
5S67	EXTERNAL AUTO STOP SWITCH	109
5S71	EMERGENCY STOP	106
5U61	VAV ZONE RESET TEMP SENSOR	98
5U66	REMOTE HUMAN INTERFACE MOD	291
5U68	CV ZONE PANEL	76
5U70	REMOTE MIN POSITION POT	120

10 X 15

REF. ACCES:

REVISION DATE:

DRAWN BY: C. MOORE

DATE: 7-7-99

SIM TO: 2307-3959

"THIS DRAWING IS PROPERTY OF AMERICAN STANDARD INC. ANY REPRODUCTION OR USE WITHOUT WRITTEN PERMISSION IS PROHIBITED."

CAD/CAM: THE TRANE COMPANY

FILE NUMBER:

ROOFTOP PACKAGED AIR CONDITIONER

SCHEMATIC WIRING DIAGRAM
POWER WIRES
GROUND SYSTEM
20 - 60 TON SHF

DRAWING NUMBER: 2308-2349

REV: B

SHT 1 OF 5