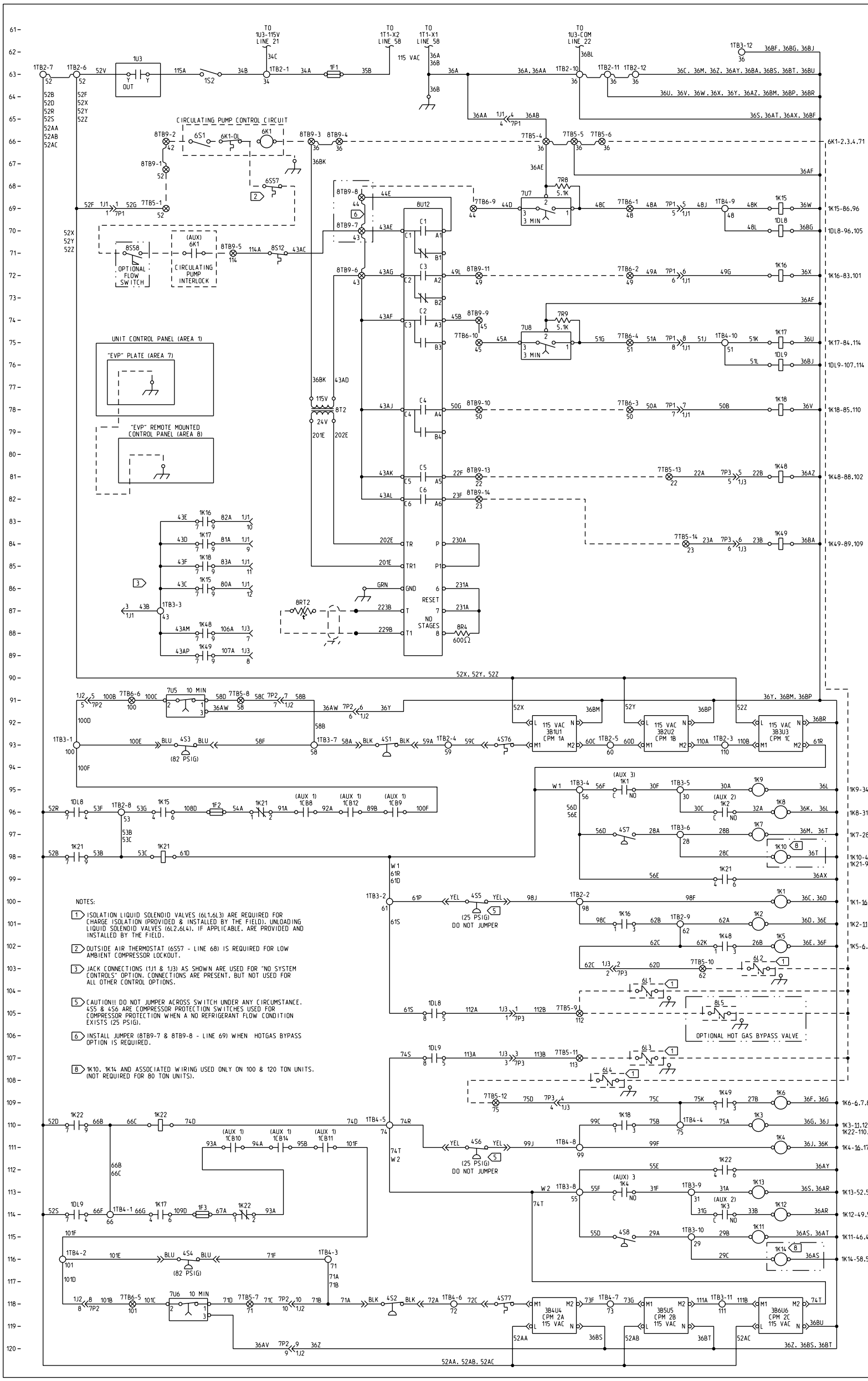

LEGEND		
DEVICE DESIG	DESCRIPTION	LINE NUMBER
1CB10	CIRCUIT BREAKER - COMPRESSOR	111
1CB11	CIRCUIT BREAKER - COMPRESSOR	111
1CB12	CIRCUIT BREAKER - COMPRESSOR	96
1CB14	CIRCUIT BREAKER - COMPRESSOR	111
1CB8	CIRCUIT BREAKER - COMPRESSOR	96
1CB9	CIRCUIT BREAKER - COMPRESSOR	96
1DL8	RELAY - TIME DELAY	70.96.105
1DL9	RELAY - TIME DELAY	76.107.114
1F1	FUSE - CONTROL CIRCUIT	63
1F2	FUSE - COMPRESSOR PROTECTION	96
1F3	FUSE - COMPRESSOR PROTECTION	114
1K1	CONTACTOR - COMPRESSOR	95.100
1K10	CONTACTOR - CONDENSER FAN	98
1K11	CONTACTOR - CONDENSER FAN	115
1K12	CONTACTOR - CONDENSER FAN	114
1K13	CONTACTOR - CONDENSER FAN	113
1K14	CONTACTOR - CONDENSER FAN	116
1K15	RELAY - COOLING	69.86.96.
1K16	RELAY - COOLING	72.83.101.
1K17	RELAY - COOLING	75.82.84.114
1K18	RELAY - COOLING	78.85.110.
1K2	CONTACTOR - COMPRESSOR	96.101
1K21	RELAY - RESET	96.98.99
1K22	RELAY - RESET	110.112.114
1K3	CONTACTOR - COMPRESSOR	110.114
1K4	CONTACTOR - COMPRESSOR	111.113
1K48	RELAY - COOLING	71.81.88.102.
1K49	RELAY - COOLING	77.84.89.109.
1K5	CONTACTOR - COMPRESSOR	102
1K6	CONTACTOR - COMPRESSOR	109
1K7	CONTACTOR - CONDENSER FAN	97
1K8	CONTACTOR - CONDENSER FAN	96
1K9	CONTACTOR - CONDENSER FAN	95
1S2	SWITCH - CONTROL CIRCUIT	63
1U3	PHASE MONITOR	63
3B1U1	MODULE - COMPRESSOR PROTECTION	94
3B2U2	MODULE - COMPRESSOR PROTECTION	94
3B3U3	MODULE - COMPRESSOR PROTECTION	94
3B4U4	MODULE - COMPRESSOR PROTECTION	118
3B5U5	MODULE - COMPRESSOR PROTECTION	118
3B6U6	MODULE - COMPRESSOR PROTECTION	118
4S1	SWITCH - HIGH PRESSURE CUTOUT	93
4S2	SWITCH - HIGH PRESSURE CUTOUT	118
4S3	SWITCH - LOW PRESSURE CUTOUT	93
4S4	SWITCH - LOW PRESSURE CUTOUT	116
4S5	SWITCH - COMPRESSOR PROTECTION	100
4S6	SWITCH - COMPRESSOR PROTECTION	111
4S7	SWITCH - FAN PRESSURE CONTROL	97
4S76	SWITCH - COMPR DISCHARGE TEMP	93
4S77	SWITCH - COMPR DISCHARGE TEMP	118
4S8	SWITCH - FAN PRESSURE CONTROL	115
6K1	CONTACTOR - EVAPORATOR FAN	66.69.71
6K1-OL	SWITCH - PUMP THERMAL OVERLOAD	66
6L1	SOLENOID - ISOLATION LIQUID	104
6L2	SOLENOID - UNLOADING LIQUID	103
6L3	SOLENOID - ISOLATION LIQUID	107
6L4	SOLENOID - UNLOADING LIQUID	108
6S1	SWITCH - EVAP FAN CONTROL	66
6S57	SWITCH - OUTSIDE AIR T-STAT	68
7R8	RESISTOR - LOAD	68
7R9	RESISTOR - LOAD	71.74
7U5	TIMER - LOW PRESSURE	91
7U6	TIMER - LOW PRESSURE	118
7U7	TIMER - COMPRESSOR FIX OFF	69
7U8	TIMER - COMPRESSOR FIX OFF	72.75
8L5	SOLENOID - HOT GAS BYPASS	105
8R4	RESISTOR - STAGE	88
8RT2	SENSOR - CHILLER TEMPERATURE	87
8S12	SWITCH - FREEZESTAT	71
8S58	SWITCH - FLOW	71
8T2	TRANSFORMER - 24V	77
8U12	CONTROLLER - CHILLER	69

DEVICE PREFIX LOCATION CODE	
AREA	LOCATION
1	CONTROL BOX
3	COMPRESSOR SECTION
4	EXTERNAL MOUNTED COMPONENTS
5	EXTERNAL MOUNTED COMPONENTS
6	CUSTOMER OR FIELD PROVIDED
7	OPTIONAL CONTROL PLATE
8	SHIP W/ FIELD INSTALLED DEVICE

NOTES:

1. ISOLATION LIQUID SOLENOID VALVES (6L1.6L3) ARE REQUIRED FOR CHARGE ISOLATION (PROVIDED & INSTALLED BY THE FIELD). UNLOADING LIQUID SOLENOID VALVES (6L2.6L4). IF APPLICABLE. ARE PROVIDED AND INSTALLED BY THE FIELD.
2. OUTSIDE AIR THERMOSTAT (6S57 - LINE 68) IS REQUIRED FOR LOW AMBIENT COMPRESSOR LOCKOUT.
3. JACK CONNECTIONS (1J1 & 1J3) AS SHOWN ARE USED FOR "NO SYSTEM CONTROLS" OPTION. CONNECTIONS ARE PRESENT. BUT NOT USED FOR ALL OTHER CONTROL OPTIONS.
5. CAUTION!! DO NOT JUMPER ACROSS SWITCH UNDER ANY CIRCUMSTANCE. 4S5 & 4S6 ARE COMPRESSOR PROTECTION SWITCHES USED FOR COMPRESSOR PROTECTION WHEN A NO REFRIGERANT FLOW CONDITION EXISTS (25 PSIG).
6. INSTALL JUMPER (8TB9-7 & 8TB9-8 - LINE 69) WHEN HOTGAS BYPASS OPTION IS REQUIRED.
8. 1K10. 1K14 AND ASSOCIATED WIRING USED ONLY ON 100 & 120 TON UNITS. (NOT REQUIRED FOR 80 TON UNITS).

CAUTION

USE COPPER CONDUCTORS ONLY!

UNIT TERMINALS ARE NOT DESIGNED TO ACCEPT OTHER TYPES OF CONDUCTORS.

FAILURE TO DO SO MAY CAUSE DAMAGE TO THE EQUIPMENT.

ATTENTION

N'UTILISER QUE DES CONDUCTEURS EN CUIVRE!

LES BORNES DE L'UNITÉ NE SONT PAS CONÇUES POUR RECEVOIR D'AUTRES TYPES DE CONDUCTEURS.

L'UTILISATION DE TOUT AUTRE CONDUCTEUR PEUT ENDOMMAGER L'ÉQUIPEMENT.

PRECAUCIÓN

¡UTILICE ÚNICAMENTE CONDUCTORES DE COBRE!

LAS TERMINALES DE LA UNIDAD NO ESTÁN DISEÑADAS PARA ACEPTAR OTROS TIPOS DE CONDUCTORES.

SI NO LO HACE. PUEDE OCASIONAR DAÑO AL EQUIPO.

IMPORTANT!

DO NOT ENERGIZE UNIT UNTIL CHECK-OUT AND START-UP PROCEDURE HAS BEEN COMPLETED.

TERMINAL BLOCKS	
DEVICE DESIG	DESCRIPTION
1TB2	POWER
1TB3	CONTROLS
1TB4	CONTROLS
7TB5	CUSTOMER CONN
7TB6	CUSTOMER CONN
8TB9	CUSTOMER CONN

THIS DRAWING IS PROPRIETARY AND SHALL NOT BE COPIED OR ITS CONTENTS DISCLOSED TO OUTSIDE PARTIES WITHOUT THE CONSENT OF TRANE.

TRANE

DRAWN BY: D. SHANNON
TRANE® DATE: 3-24-11
REPLACES: 2307-9136-F
REVISION DATE: --
CAD SYSTEM USED: Pro/DIAGRAM
SIMILAR TO: --

FILE NUMBER: 2307-9213
DRAWING NUMBER: 2307-9216
SHEET: 1 OF 1
REV: A

SPLIT SYSTEM CONDENSING UNIT
DIAGRAM
SCHEMATIC - AIR COOLED
RA 80-120 TON - "EVP" CONTROLS
SCHEMATIC 2 OF 2