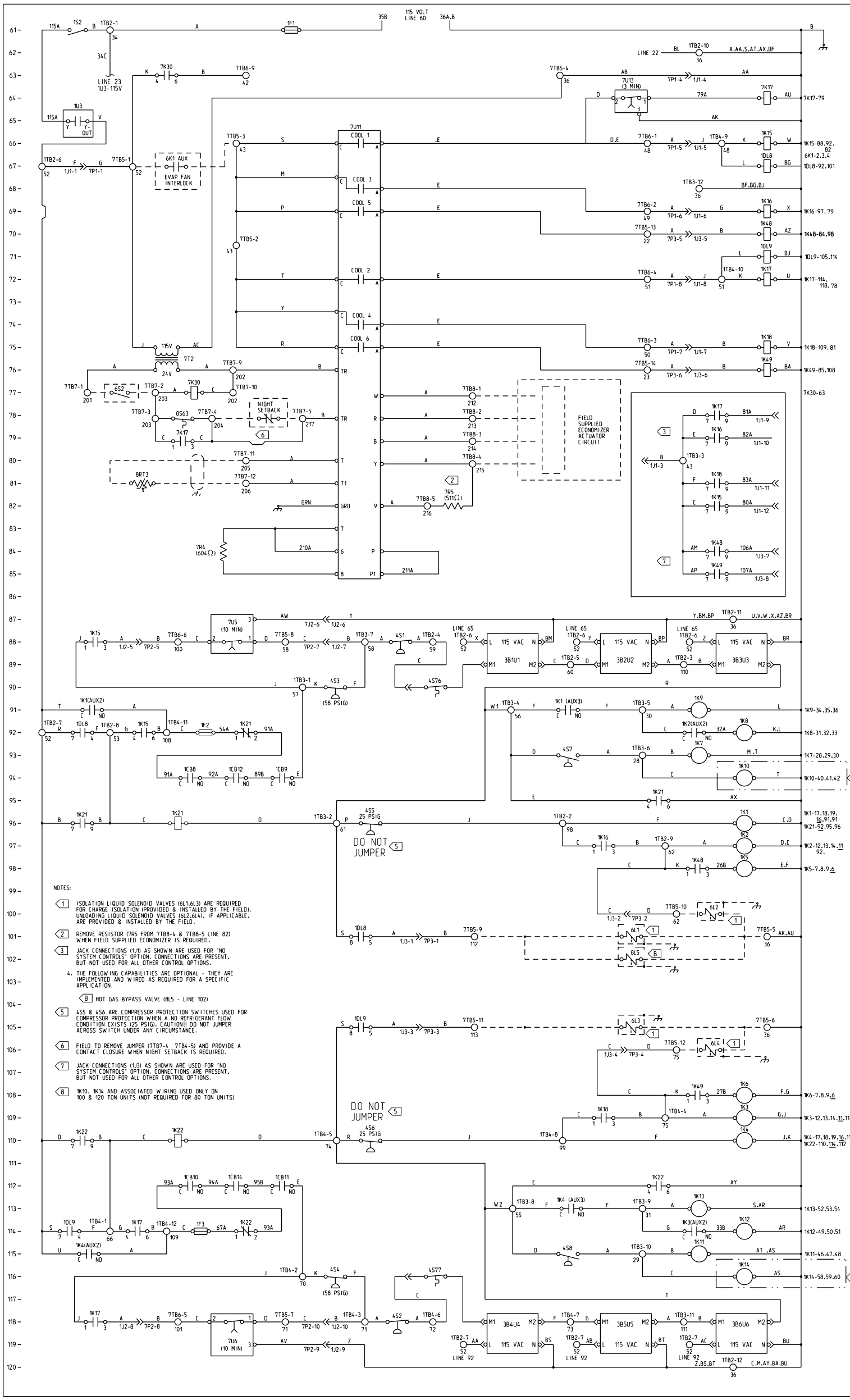

LEGEND		
DEVICE DESIGNATION	DESCRIPTION	LINE NUMBER
1DL8.1DL9	TIME DELAY RELAY	67.71
1F1	CONTROL CIRCUIT FUSE	61
1F2.1F3	COMPR PROTECTION FUSE	92.114
1J1.1J2.1J3	JACK CONNECTOR	
1K1.1K2	COMPRESSOR CONTACTOR	96.97
1K3.1K4	COMPRESSOR CONTACTOR	**109.110**
1K5.1K6	COMPRESSOR CONTACTOR	98.108
1K7-1K9	CONDENSER FAN CONTACTOR	93.92.91
1K11-1K13	CONDENSER FAN CONTACTOR	115.114.113
1K10.1K14	**CONDENSER FAN CONTACTOR**	**94.116**
1K15.1K16	COOLING RELAY	66.69
1K17.1K18	COOLING RELAY	72.75
1K21.1K22	RESET RELAY	96.110
1K48.1K49	COOLING RELAY	70.76
1S2	CONTROL CIRCUIT SWITCH	61
3B1U1.3B2U2.3B3U3	COMPR PROTECTION MODULE	88.88.88
3B4U4.3B5U5.3B6U6	COMPR PROTECTION MODULE	118.118.118
4S1.4S2	HIGH PRESSURE CUTOUT	88.118
4S3.4S4	LOW PRESSURE CUTOUT	90.116
4S5.4S6	COMPR PROTECTION SWITCH	96.110
4S7.4S8	FAN PRESSURE CONTROL	93.115
4S76.4S77	COMPR DISCHARGE LIMIT TEMP SWT	90.116
6K1	EVAP FAN STARTER	67
6L1.6L3	ISOLATION LIQUID SOLENOID	101.105
6L2.6L4	UNLOADING LIQUID SOLENOID	100.106
6S2	SYSTEM CONTROL SWITCH	77
7K17	COMPR FIXED ON RELAY	64
7K30	EVAPORATOR FAN RELAY	77
7P1.7P2.7P3	PLUG CONNECTOR	
7R4	STAGE RESISTOR	84
7R5	LESS ECONOMIZER RESISTOR	82
7T2	24V TRANSFORMER	75
7U11	DISCHARGE AIR CONTROLLER	66
7U13	COMPR FIXED ON TIMER	64
7U5.7U6	LOW PRESSURE TIMER	87.119
8L5	HOT GAS BYPASS	102
8RT3	DISCHARGE AIR SENSOR	81
8S63	SUCTION LINE THERMOSTAT	78

DEVICE PREFIX LOCATION CODE	
AREA	LOCATION
1	CONTROL PANEL
3	COMPRESSOR
4	EXTERNAL MOUNTED COMPONENTS
5	EXTERNAL MOUNTED COMPONENTS
6	CUSTOMER PROVIDED DEVICE
7	OPTIONAL CONTROL PLATE
8	SHIP W/ FIELD INSTALLED DEVICE

NOTES:

1. ISOLATION LIQUID SOLENOID VALVES (6L1.6L3) ARE REQUIRED FOR CHARGE ISOLATION (PROVIDED & INSTALLED BY THE FIELD). UNLOADING LIQUID SOLENOID VALVES (6L2.6L4). IF APPLICABLE. ARE PROVIDED & INSTALLED BY THE FIELD.
2. REMOVE RESISTOR (7R5 FROM 7TB8-4 & 7TB8-5 LINE 82) WHEN FIELD SUPPLIED ECONOMIZER IS REQUIRED.
3. JACK CONNECTIONS (1J1) AS SHOWN ARE USED FOR "NO SYSTEM CONTROLS" OPTION. CONNECTIONS ARE PRESENT. BUT NOT USED FOR ALL OTHER CONTROL OPTIONS.
4. THE FOLLOWING CAPABILITIES ARE OPTIONAL - THEY ARE IMPLEMENTED AND WIRED AS REQUIRED FOR A SPECIFIC APPLICATION.
   - B HOT GAS BYPASS VALVE (8L5 - LINE 102)
5. 4S5 & 4S6 ARE COMPRESSOR PROTECTION SWITCHES USED FOR COMPRESSOR PROTECTION WHEN A NO REFRIGERANT FLOW CONDITION EXISTS (25 PSIG). CAUTION!! DO NOT JUMPER ACROSS SWITCH UNDER ANY CIRCUMSTANCE.
6. FIELD TO REMOVE JUMPER (7TB7-4 7TB4-5) AND PROVIDE A CONTACT CLOSURE WHEN NIGHT SETBACK IS REQUIRED.
7. JACK CONNECTIONS (1J3) AS SHOWN ARE USED FOR "NO SYSTEM CONTROLS" OPTION. CONNECTIONS ARE PRESENT. BUT NOT USED FOR ALL OTHER CONTROL OPTIONS.
8. 1K10. 1K14 AND ASSOCIATED WIRING USED ONLY ON 100 & 120 TON UNITS (NOT REQUIRED FOR 80 TON UNITS)

IMPORTANT!

DO NOT ENERGIZE UNIT UNTIL CHECK-OUT AND START-UP PROCEDURE HAS BEEN COMPLETED.

CAUTION

USE COPPER CONDUCTORS ONLY!

UNIT TERMINALS ARE NOT DESIGNED TO ACCEPT OTHER TYPES OF CONDUCTORS.

FAILURE TO DO SO MAY CAUSE DAMAGE TO THE EQUIPMENT.

ATTENTION

N'UTILISER QUE DES CONDUCTEURS EN CUIVRE!

LES BORNES DE L'UNITÉ NE SONT PAS CONÇUES POUR RECEVOIR D'AUTRES TYPES DE CONDUCTEURS.

L'UTILISATION DE TOUT AUTRE CONDUCTEUR PEUT ENDOMMAGER L'ÉQUIPEMENT.

PRECAUCIÓN

¡UTILICE ÚNICAMENTE CONDUCTORES DE COBRE!

LAS TERMINALES DE LA UNIDAD NO ESTÁN DISEÑADAS PARA ACEPTAR OTROS TIPOS DE CONDUCTORES.

SI NO LO HACE. PUEDE OCASIONAR DAÑO AL EQUIPO.

THIS DRAWING IS PROPRIETARY AND SHALL NOT BE COPIED OR ITS CONTENTS DISCLOSED TO OUTSIDE PARTIES WITHOUT THE CONSENT OF TRANE.

TRANE

DRAWN BY: T.DEPRIEST
TRANE® DATE: 09/15/08
REPLACES: 2307-4489/4491
REVISION DATE: 8-12-09
CAD SYSTEM USED: Pro/DETAIL
SIMILAR TO: --

FILE NUMBER: 2307-9133

SPLIT SYSTEM CONDENSING UNIT

DIAGRAM

SCHEMATIC - AIR COOLED - SHEET 2 OF 2
LINE VOLTAGE 200.230.460.575V/60HZ/3PH
RA 80-120 TON W/ VARIABLE AIR VOLUME CONTROLS

DRAWING NUMBER: 2307-9135

SHEET: 1 OF 1

REV: D