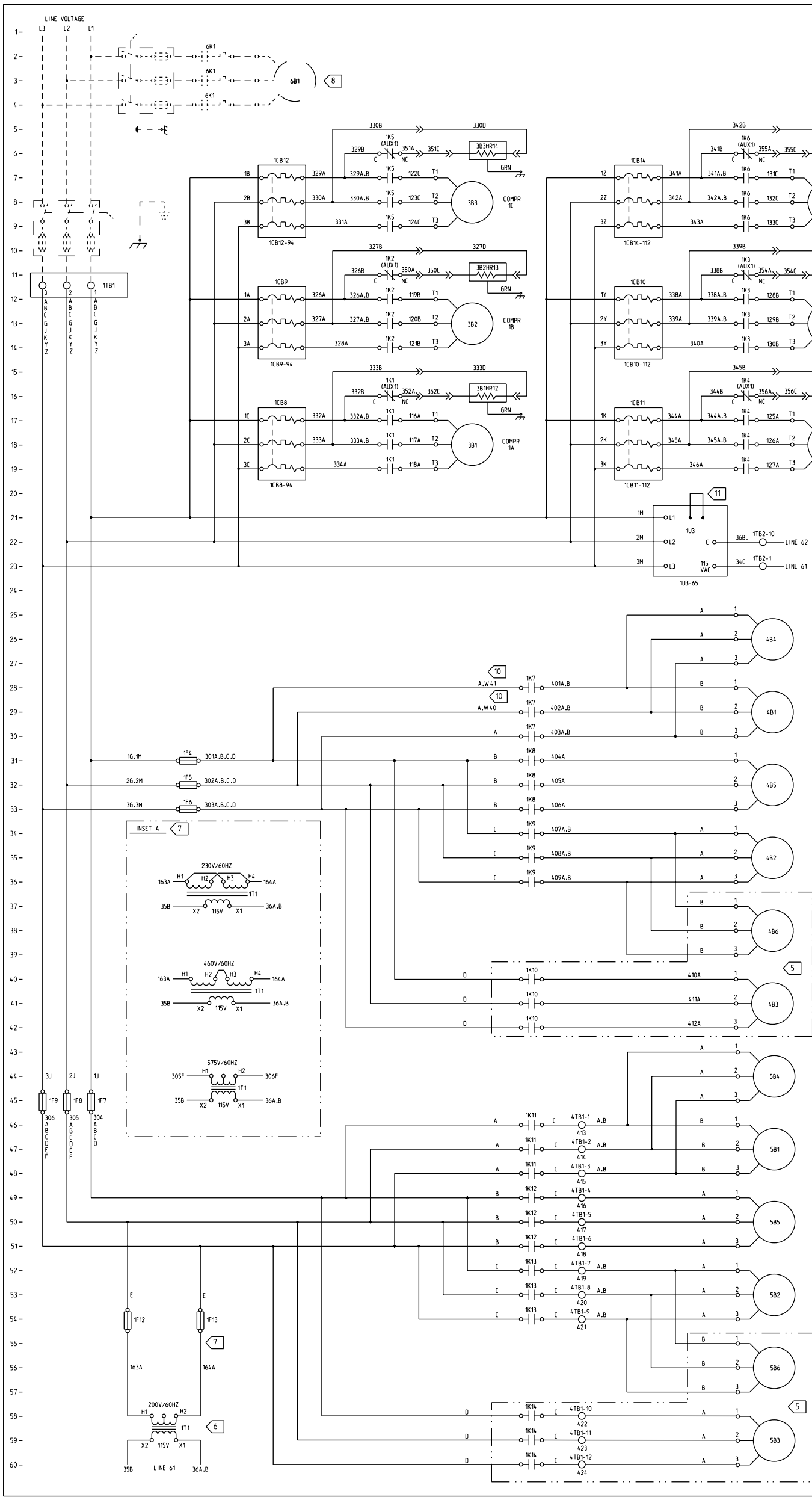

LEGEND		
DEVICE DESIGNATION	DESCRIPTION	LINE NUMBER
1CB8 - 1CB12, 1CB14	COMPR CIRCUIT BREAKERS	17.12.7
1F4,1F5,1F6	CONDENSER FAN FUSE	31.32.33
1F7,1F8,1F9	CONDENSER FAN FUSE	45
1F12,1F13	TRANSFORMER FUSE	54
1T1	CONTROL POWER TRANSFORMER	58
1TB1	POWER TERMINAL BLOCK	11
1U3	PHASE MONITOR	22
3B1 - 3B6	COMPRESSORS	18.13.8
3B1HR12 - 3B4HR17	COMPR CRANKCASE HEATER	16.11.6
4B1 - 4B6	CONDENSER FAN MOTOR	26 - 41
5B1 - 5B6	CONDENSER FAN MOTOR	44 - 59
6B1	EVAP FAN MOTOR	3

DEVICE PREFIX LOCATION CODE	
AREA	LOCATION
1	CONTROL PANEL
3	COMPRESSOR
4	EXT MTD COMPONENTS (COMP AREA)
5	EXT MTD COMPONENTS
6	CUSTOMER PROVIDED DEVICE
7	OPTIONAL CONTROL PLATE (AREA 1)
8	SHIP W/ FIELD INSTALLED DEVICE

NOTE:

1. SOLID LINES INDICATE TRANE WIRING. DASHED LINES INDICATE FIELD WIRING. PHANTOM LINES INDICATE OPTIONAL FEATURES.
2. UNLESS OTHERWISE NOTED, ALL SWITCHES ARE SHOWN AT 25° C (77° F) AT ATMOSPHERIC PRESSURE, AT 50% RELATIVE HUMIDITY, WITH ALL UTILITIES TURNED OFF AND AFTER A NORMAL SHUTDOWN HAS OCCURED.
3. NUMBERS ALONG THE RIGHT SIDE OF THE SCHEMATIC DESIGNATE THE LOCATION OF THE CONTACTS BY LINE NUMBER. AN UNDERLINED NUMBER INDICATES A NORMALLY CLOSED CONTACT. AN OPEN ARROWHEAD BELOW THE LINE NUMBER POINTING UPWARD, INDICATES A TIMED CONTACT WHICH BEGINS TIMING WHEN ENERGIZED. A TERMINAL SYMBOL WITH AN "X" IN IT INDICATES A CUSTOMER 24V CONNECTION TERMINAL BLOCK. A SQUARE TERMINAL SYMBOL INDICATES A CUSTOMER 115V CONNECTION TERMINAL BLOCK.

5 — 4B3,4B6,5B3,5B6,1K10,1K14 AND ASSOCIATED WIRING ARE NOT USED ON 80 TON UNITS.

6 — 200V/60HZ TRANSFORMER (1T1) SHOWN. SEE INSET "A" FOR OTHER VOLTAGE CONNECTIONS.

7 — FUSES (1F12 & 1F13) AND WIRES 163A,164A,305E,306E ARE USED WITH ALL VOLTAGES EXCEPT 575 VOLT. ON 575V UNITS WIRES 305F AND 306F WIRE DIRECTLY TO TRANSFORMER.

8 — CIRCUIT AS SHOWN IS FOR CUSTOMER FURNISHED EVAP FAN. WHEN EVP OPTION IS REQUIRED, THIS CIRCUIT BECOMES A CIRCULATING PUMP - MOTOR (6B1), STARTER (6K1) AND SWITCH (6S1).

9. THIS DIAGRAM IS A GENERIC POWER SECTION DIAGRAM. SOME DEVICES WHICH APPEAR IN THE ABOVE LEGEND (AREAS 6 THRU 8) WILL NOT APPEAR ON EVERY CONTROL SECTION DIAGRAM. SEE LEGEND ON CONTROL SECTION DIAGRAM FOR CORRECT DEVICES USED PER APPLICATION.

10 — WIRES "W40" & "W41" REQUIRED ONLY WITH LOW AMBIENT DAMPER OPTION.

11 — CUT 1U3 PHASE MONITOR JUMPER ON 380V/415V/50HZ APPLICATIONS ONLY.

IMPORTANT!

DO NOT ENERGIZE UNIT UNTIL CHECK-OUT AND START-UP PROCEDURE HAS BEEN COMPLETED.

CAUTION

USE COPPER CONDUCTORS ONLY!

UNIT TERMINALS ARE NOT DESIGNED TO ACCEPT OTHER TYPES OF CONDUCTORS.

FAILURE TO DO SO MAY CAUSE DAMAGE TO THE EQUIPMENT.

ATTENTION

N'UTILISER QUE DES CONDUCTEURS EN CUIVRE!

LES BORNES DE L'UNITÉ NE SONT PAS CONÇUES POUR RECEVOIR D'AUTRES TYPES DE CONDUCTEURS.

L'UTILISATION DE TOUT AUTRE CONDUCTEUR PEUT ENDOMMAGER L'ÉQUIPEMENT.

PRECAUCIÓN

¡UTILICE ÚNICAMENTE CONDUCTORES DE COBRE!

LAS TERMINALES DE LA UNIDAD NO ESTÁN DISEÑADAS PARA ACEPTAR OTROS TIPOS DE CONDUCTORES.

SI NO LO HACE, PUEDE OCASIONAR DAÑO AL EQUIPO.

THIS DRAWING IS PROPRIETARY AND SHALL NOT BE COPIED OR ITS CONTENTS DISCLOSED TO OUTSIDE PARTIES WITHOUT THE CONSENT OF TRANE.

TRANE

DRAWN BY: T.DEPRIEST
TRANE® DATE: 09/10/08
REPLACES: 2307-4486
REVISION DATE: 8-12-09
CAD SYSTEM USED: Pro/DETAIL
SIMILAR TO: --

FILE NUMBER:

SPLIT SYSTEM CONDENSING UNIT DIAGRAM

POWER SCHEMATIC - RA 80-120 TON
LINE VOLTAGE 200,230,460,575V/60HZ/3PH
SHEET 1 OF 2

DRAWING NUMBER: 2307-9132
SHEET: 1 OF 1
REV: C