WARNING

HAZARDOUS VOLTAGE!

DISCONNECT ALL ELECTRIC POWER INCLUDING REMOTE DISCONNECTS BEFORE SERVICING.

FAILURE TO DISCONNECT POWER BEFORE SERVICING CAN CAUSE SEVERE PERSONAL INJURY OR DEATH.

AVERTISSEMENT

VOLTAGE HASARDEUX!

DECONNECTEZ TOUTES LES SOURCES ELECTRIQUES INCLUANT LES DISJONCTEURS SITUES A DISTANCE AVANT D'EFFECTUER L'ENTRETIEN.

FAUTE DE DECONNECTER LA SOURCE ELECTRIQUE AVANT D'EFFECTUER L'ENTRETIEN PEUT ENTRAINER DES BLESSURES CORPORELLES SEVERES OU LA MORT.

CAUTION

USE COPPER CONDUCTORS ONLY!

UNIT TERMINALS ARE NOT DESIGNED TO ACCEPT OTHER TYPES OF CONDUCTORS.

FAILURE TO DO SO MAY CAUSE DAMAGE TO THE EQUIPMENT.

DEVICE PREFIX LOCATION CODE	
AREA	LOCATION
1	INSIDE UNIT CONTROL BOX
2	CONDENSER SECTION
3	AIR HANDLER SECTION
4	HEATING SECTION
5	EXTERNAL FIELD MTD DEVICE

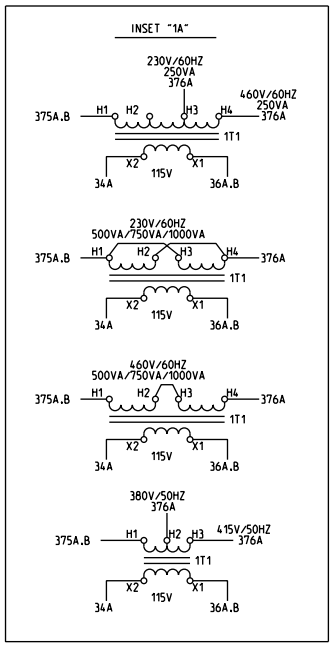

NOTES:

1. UNLESS OTHERWISE NOTED, ALL SWITCHES ARE SHOWN AT 25°C (77°F), AT ATMOSPHERIC PRESSURE, AT 50% RELATIVE HUMIDITY, WITH ALL UTILITIES TURNED OFF, AND AFTER A NORMAL SHUTDOWN HAS OCCURRED.
2. DASHED LINES INDICATE RECOMMENDED FIELD WIRING BY OTHERS. DASHED LINE ENCLOSURES AND/OR DASHED DEVICE OUTLINES INDICATE COMPONENTS PROVIDED BY THE FIELD. PHANTOM LINE ENCLOSURES INDICATE ALTERNATE CIRCUITRY OR AVAILABLE SALES OPTIONS. SOLID LINE INDICATES WIRING BY TRANE CO.
3. NUMBERS ALONG THE RIGHT SIDE OF THE SCHEMATIC DESIGNATE THE LOCATION OF CONTACTS BY LINE NUMBER. AN UNDERLINED NUMBER INDICATES A NORMALLY CLOSED CONTACT. AN OPEN ARROWHEAD BELOW THE LINE NUMBER POINTING UPWARD INDICATES A TIMED CONTACT WHICH BEGINS TIMING WHEN ENERGIZED.

4 SEE APPLICABLE HEATING SECTION DIAGRAM FOR BALANCE OF CIRCUIT.

5 1F4.1F5.1F6.1K4.1K6.1K9.1K10.1CB10.1CB11.2B4.2B5.2B8.2B18.2B8HR14.2B18HR15 AND ASSOCIATED WIRING USED ON 40 THRU 60 TON UNITS ONLY.

6 200V/60HZ OR 575V/60HZ TRANSFORMER SHOWN. SEE INSET "1A" FOR 460V/60HZ. 230V/60HZ. 380V/50HZ OR 415V/50HZ CONNECTIONS.

7 2B3 AND ASSOCIATED WIRING USED ON 25. 30 & 50 THRU 60 TON UNITS ONLY.

8 2B6 AND ASSOCIATED WIRING USED ON 50 THRU 60 TON UNITS ONLY.

12 230V/60HZ. 380V/50HZ. 415V/50HZ OR 575V/60HZ TRANSFORMERS SHOWN. SEE INSET "1B" FOR 200V/60HZ OR 460V/60HZ CONNECTIONS.

13 230V/60HZ. 575V/60HZ TRANSFORMERS SHOWN. SEE INSET "1C" FOR 200V/60HZ AND 460V/60HZ TRANSFORMERS.

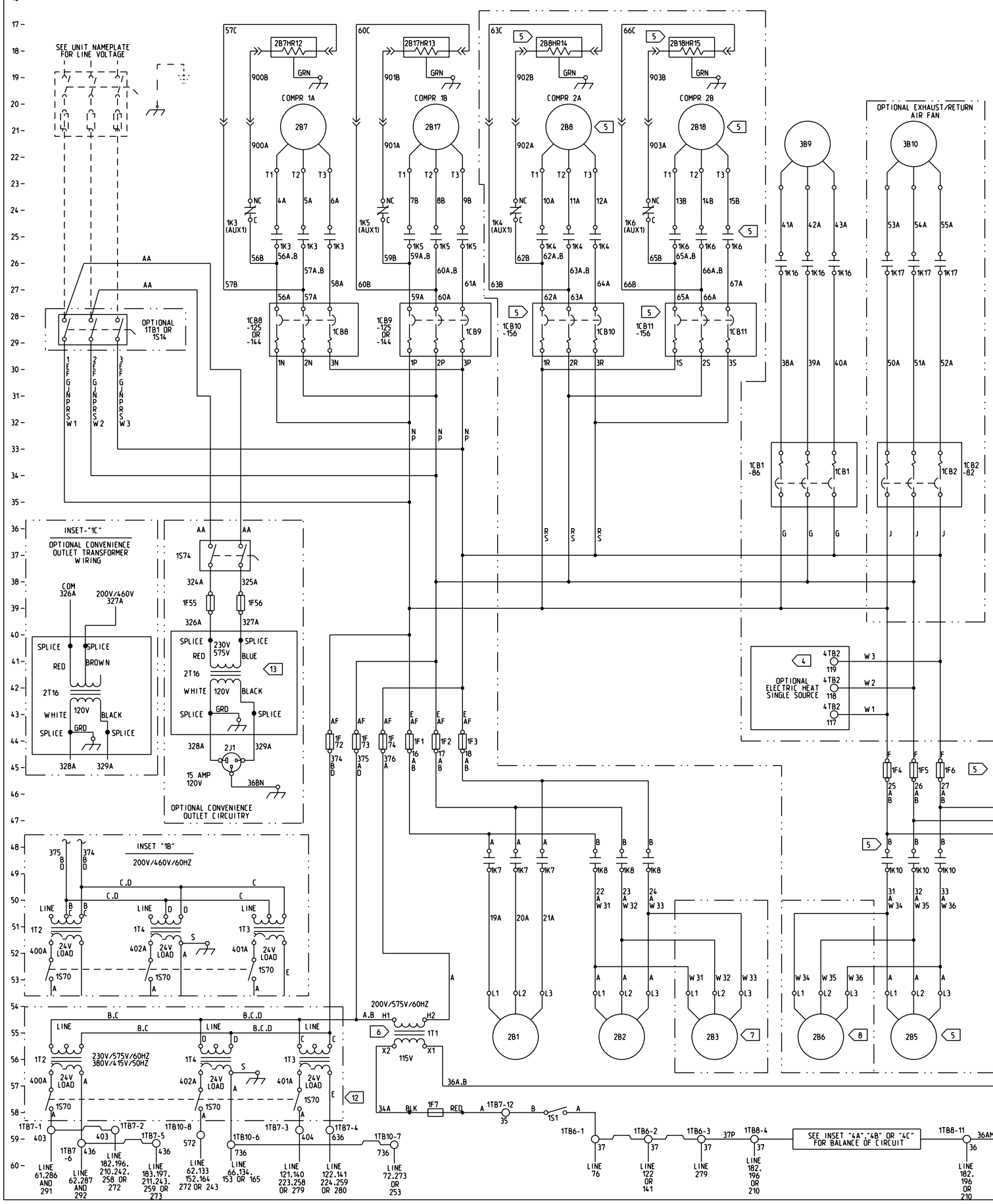

LEGEND		
DEVICE DESIGNATION	DESCRIPTION	LINE NUMBER
1CB1	SUPPLY FAN BREAKER	34
1CB2	EXHAUST FAN BREAKER	34
1CB8 - 1CB11	COMPR CIRCUIT BREAKER	28
1F1 - 1F6	CONDENSER FAN FUSE	44
1F7	CONTROL CIRCUIT FUSE	58
1F44.1F45	COMPR PROTECTOR FUSE	125.144.156
1F55.1F56	CONVENIENCE OUTLET FUSE	39
1F72 - 1F74	TRANSFORMER CIRCUIT FUSE	44
1K3.1K4	COMPRESSOR CONTACTOR	127.146.158
1K5.1K6	COMPRESSOR CONTACTOR	123.142.154
1K7.1K8	CONDENSER FAN CONTACTOR	129.131.148.150
1K9.1K10	CONDENSER FAN CONTACTOR	160.162
1K16	SUPPLY FAN CONTACTOR	86
1K17	EXHAUST FAN CONTACTOR	82
1S1	CONTROL CIRCUIT SWITCH	58
1S14	MANUAL DISCONNECT SWITCH	28
1S70	24 VOLT TRANSFORMER SW	57
1S74	CONV. OUTLET SWITCH	37
1T1	CONTROL POWER TRANSFORMER	55
1T2.1T3.1T4	24 VOLT TRANSFORMER	56
1TB1	POWER TERMINAL BLOCK	28
1TB4.5.16.17	CONT TERM BLOCK (CUSTOMER)	
1TB6 - 1TB10	CONT TERM BLOCK (FACTORY)	
1U48	ROOFTOP MODULE	61
1U49	COMPRESSOR MODULE	121.140
1U50	HEAT MODULE	182.196.210
1U51	GENERIC B.A.S. MODULE	223
1U52	EXH/COMP ENTHALPY MODULE	242
1U53	VENTILATION OVERRIDE MOD	258
1U54.1U104	BAS/NETWORK COMM MODULE	272
1U55	INTERPRO COMM BRIDGE MOD	279
1U65	HUMAN INTERFACE MODULE	286
1U105	MULTI PURPOSE MODULE	259
1U107	MODULATING DEHUMID. MODULE	279
2B1 - 2B6	CONDENSER FAN MOTOR	55
2B7.8.17.18	COMPRESSOR	21
2B7HR12.2B17HR13	COMPR CRANKCASE HEATER	18
2B8HR14.2B18HR15	COMPR CRANKCASE HEATER	18
2B7S1.2B17S2	COMPR WINDING T-STAT	125.144
2B8S3.2B18S4	COMPR WINDING T-STAT	156
2J1	CONVENIENCE OUTLET	45
2L25	MODULATING REHEAT VALVE	283
2L26	MODULATING CONDENSER VALVE	289
2RT1.2RT2	SAT COND TEMP SENSOR	127.146.158
2S2.2S3	HIGH PRESS CUTOUT	125.144.156
2S4.2S5	LOW PRESS CUTOUT	125.144.156
2T16	CONV. OUTLET TRANSFORMER	42
2U84	LOW AMBIENT DAMPER ACT #1	133.152
2U85	LOW AMBIENT DAMPER ACT #2	164
3B9	SUPPLY FAN MOTOR	22
3B10	EXHAUST/RETURN FAN MOTOR	22
3L21	SPACE PRESS CALIBRATED SOL	248
3L24	PLENUM PRESS CALIBRATED SOL	264
3RT3	OUTDOOR AIR TEMP SENSOR	100
3RT6	RETURN AIR TEMP SENSOR	251
3RT9	SUPPLY AIR TEMP SENSOR	91
3RT14.3RT15	LEAVING EVAP TEMP SENSOR	123.142.154
3S16	R/A HIGH DUCT TEMP T-STAT	106
3S17	S/A HIGH DUCT TEMP T-STAT	106
3S21	FILTER SWITCH	117
3S68	SPLY AIRFLOW PROVING SW	113
3S69	EXH AIRFLOW PROVING SW	115
3RT28.3RT29	ENTERING EVAP TEMP SENSOR	150.162.132
3U12	EXHAUST ACTUATOR	72.253
3U13	ECONOMIZER ACTUATOR	72
3U17	VAV INLET VANE ACTUATOR	66
3U60	S/A DUCT PRESS TRANSDUCER	95
3U62	SPACE PRESS TRANSDUCER	249
3U63	O/A HUMIDITY SENSOR	104
3U64	R/A HUMIDITY SENSOR	254
3U106	R/A PLENUM PRESSURE TRANDUCER	263
4S12	FREEZESTAT	218
4TB2.4TB3	TERM BLOCK-ELEC HT SECT	
4TB14	TERM BLOCK-GAS HT SECT	
4U15	HYDRONIC HEAT ACTUATOR	212
5K86	OCCUPIED/UNOCCUPIED RELAY	112
5K87	VAV CHANGEOVER RELAY	119
5K89	DEMAND LIMIT RELAY	231
5K90.5K91	VENT OVERRIDE MODE RELAY	260.262
5K92.5K93.5K94	VENT OVERRIDE MODE RELAY	264.266.268
5RT16	MORNING WARM-UP TEMP SENSOR	187.201.215
5S67	EXTERNAL AUTO STOP SWITCH	109
5S71	EMERGENCY STOP	106
5U56	CV REMOTE PANEL	81
5U57	REMOTE ZONE TEMP SENSOR	67
5U58	CV/VAV REM PNL W/ NSB	89
5U59	VAV REMOTE PANEL	79
5U61	VAV ZONE RESET TEMP SENSOR	98
5U66	REMOTE HUMAN INTERFACE MOD	291
5U68	CV ZONE PANEL	76
5U69	REMOTE ZONE TEMP SENSOR	89
5U70	REMOTE MIN POSITION POT	120

THIS DRAWING IS PROPRIETARY AND SHALL NOT BE COPIED OR ITS CONTENTS DISCLOSED TO OUTSIDE PARTIES WITHOUT THE CONSENT OF TRANE.

DRAWN BY: T.DEPRIEST
REPLACES: --
CAD SYSTEM USED: Pro/DETAIL
TRANE® DATE: 08-09-00
REVISION DATE: 06-Mar-08
SIMILAR TO: 2307-3959

TRANE

FILE NUMBER: 2307-3969

ROOFTOP PACKAGED AIR CONDITIONER
SCHEMATIC WIRING DIAGRAM
ROOFTOP UCM
POWER WIRES
20 - 60 TON S-HF

DRAWING NUMBER: 2307-4593
SHEET: 1 OF 5
REV: B