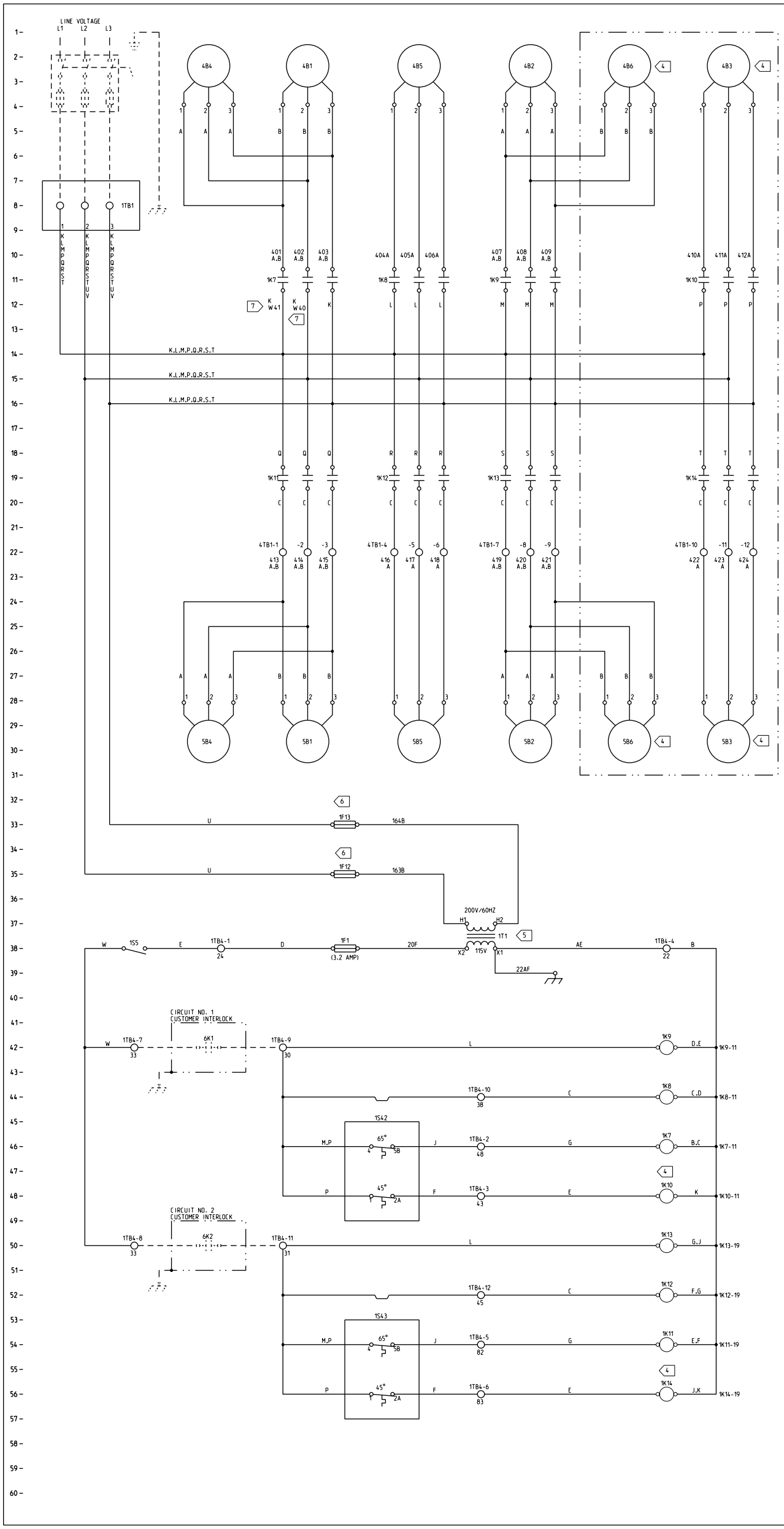

LEGEND		
DEVICE DESIGNATION	DESCRIPTION	LINE NUMBER
1F1	CONTROL CIRCUIT FUSE	38
1F12.1F13	TRANSFORMER FUSE	35.33
1K7.1K8.1K9	CONDENSER FAN CONTACTOR	46.44.42
1K10.11.12	CONDENSER FAN CONTACTOR	48.54.52
1K13.1K14	CONDENSER FAN CONTACTOR	50.56
1S5	CONTROL CIRCUIT SWITCH	38
1S42.1S43	COND FAN TEMP CONTROL	46.54
1T1	CONTROL POWER TRANSFORMER	37
1TB1	POWER TERMINAL BLOCK	8
1TB4	CONTROL TERMINAL BLOCK	
4B1 - 4B6	CONDENSER FAN MOTOR	4
4TB1	FAN TERMINAL STRIP	22
5B1 - 5B6	CONDENSER FAN MOTOR	28
6K1.6K2	CUSTOMER INTERLOCK	42.50

DEVICE PREFIX LOCATION CODE	
AREA	LOCATION
1	CONTROL PANEL
2	
3	
4	EXT MTD COMPONENTS (COND 1 AREA)
5	EXT MTD COMPONENTS (COND 2 AREA)
6	CUSTOMER PROVIDED DEVICE
7	
8	

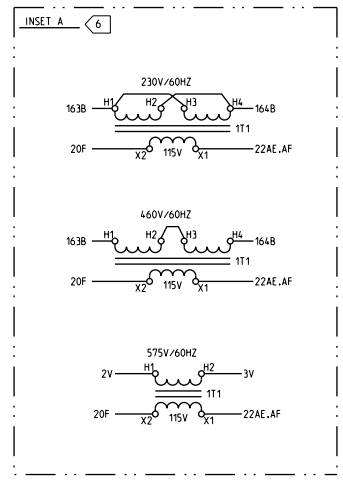

NOTE:

1. SOLID LINES INDICATE TRANE WIRING. DASHED LINES INDICATE FIELD WIRING. PHANTOM LINES INDICATE OPTIONAL FEATURES.
2. UNLESS OTHERWISE NOTED. ALL SWITCHES ARE SHOWN AT 25°C (77°F) AT ATMOSPHERIC PRESSURE. AT 50% RELATIVE HUMIDITY. WITH ALL UTILITIES TURNED OFF AND AFTER A NORMAL SHUTDOWN HAS OCCURED.
3. NUMBERS ALONG THE RIGHT SIDE OF THE SCHEMATIC DESIGNATE THE LOCATION OF THE CONTACTS BY LINE NUMBER. AN UNDERLINED NUMBER INDICATES A NORMALLY CLOSED CONTACT. AN OPEN ARROWHEAD BELOW THE LINE NUMBER POINTING UPWARD. INDICATES A TIMED CONTACT WHICH BEGINS TIMING WHEN ENERGIZED.

4 — 4B3. 4B6. 5B3. 5B6. 1K10. 1K14 AND ASSOCIATED WIRING ARE NOT USED ON 80 TON UNITS.

5 — 200V/60HZ TRANSFORMER (1T1) SHOWN. SEE INSET "A" FOR OTHER VOLTAGE CONNECTIONS.

6 — FUSES (1F12 & 1F13) AND WIRES 2U. 3U. 163B. 164B ARE USED WITH ALL VOLTAGES EXCEPT 575 VOLT. ON 575V UNITS. WIRES "2V AND 3V" WIRE DIRECTLY TO TRANSFORMER.

7 — WIRES "W40" & "W41" REQUIRED ONLY WITH LOW AMBIENT DAMPER OPTION.

CAUTION

USE COPPER CONDUCTORS ONLY!

UNIT TERMINALS ARE NOT DESIGNED TO ACCEPT OTHER TYPES OF CONDUCTORS.

FAILURE TO DO SO MAY CAUSE DAMAGE TO THE EQUIPMENT.

ATTENTION

N'UTILISER QUE DES CONDUCTEURS EN CUIVRE!

LES BORNES DE L'UNITÉ NE SONT PAS CONÇUES POUR RECEVOIR D'AUTRES TYPES DE CONDUCTEURS.

L'UTILISATION DE TOUT AUTRE CONDUCTEUR PEUT ENDOMMAGER L'ÉQUIPEMENT.

PRECAUCIÓN

¡UTILICE ÚNICAMENTE CONDUCTORES DE COBRE!

LAS TERMINALES DE LA UNIDAD NO ESTÁN DISEÑADAS PARA ACEPTAR OTROS TIPOS DE CONDUCTORES.

SI NO LO HACE. PUEDE OCASIONAR DAÑO AL EQUIPO.

IMPORTANTI

DO NOT ENERGIZE UNIT UNTIL CHECK-OUT AND START-UP PROCEDURE HAS BEEN COMPLETED.

THIS DRAWING IS PROPRIETARY AND SHALL NOT BE COPIED OR ITS CONTENTS DISCLOSED TO OUTSIDE PARTIES WITHOUT THE CONSENT OF TRANE.

TRANE

DRAWN BY: T.DEPRIEST
TRANE@ DATE: 06/25/08
REPLACES: --
REVISION DATE: --
CAD SYSTEM USED: Pro/DETAIL
SIMILAR TO: 2306-3659

FILE NUMBER:
DRAWING NUMBER: 2307-9125
SHEET: 1 OF 1
REV: A

SPLIT SYSTEM CONDENSING UNIT
DIAGRAM
POWER SCHEMATIC
DUPLEX CONDENSER UNITS
CA 80-120 TON