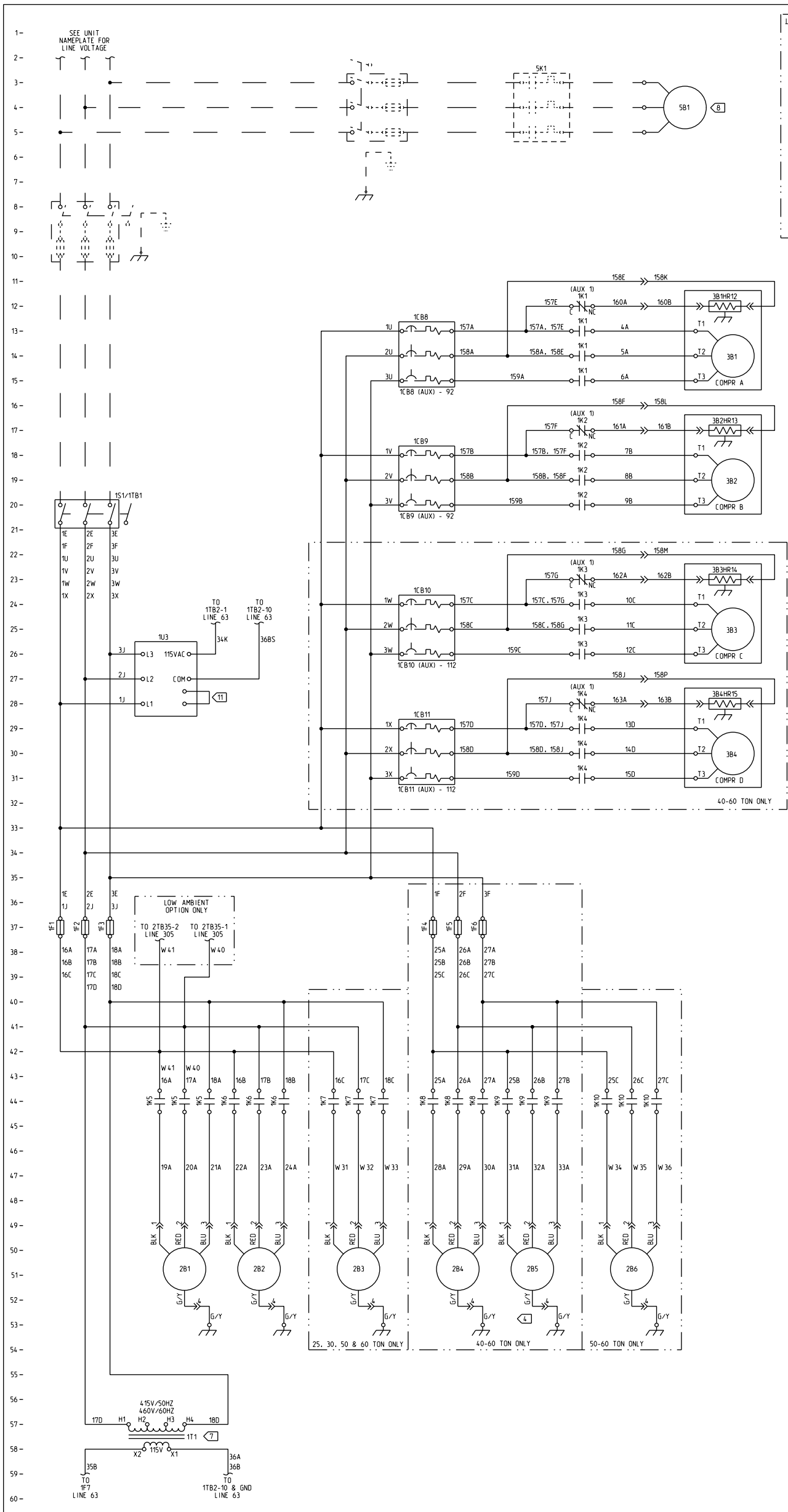


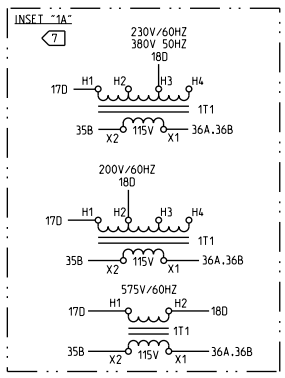


| LEGEND | | |
|---|---|---|
| DEVICE DESIGNATION | DESCRIPTION | LINE NUMBER |
| 1CB10 | CIRCUIT BREAKER - COMPRESSOR | 25 |
| 1CB11 | CIRCUIT BREAKER - COMPRESSOR | 30 |
| 1CB8 | CIRCUIT BREAKER - COMPRESSOR | 14 |
| 1CB9 | CIRCUIT BREAKER - COMPRESSOR | 19 |
| 1F1 | FUSE - CONDENSER FAN | 37 |
| 1F2 | FUSE - CONDENSER FAN | 37 |
| 1F3 | FUSE - CONDENSER FAN | 37 |
| 1F4 | FUSE - CONDENSER FAN | 37 |
| 1F5 | FUSE - CONDENSER FAN | 37 |
| 1F6 | FUSE - CONDENSER FAN | 37 |
| 1S1/1TB1 | MANUAL DISCONNECT/TERM BLOCK | 20 |
| 1T1 | TRANSFORMER - CONTROL POWER | 57 |
| 1U3 | PHASE MONITOR - POWER | 27 |
| 2B1 | MOTOR - CONDENSOR FAN | 51 |
| 2B2 | MOTOR - CONDENSOR FAN | 51 |
| 2B3 | MOTOR - CONDENSOR FAN | 51 |
| 2B4 | MOTOR - CONDENSOR FAN | 51 |
| 2B5 | MOTOR - CONDENSOR FAN | 51 |
| 2B6 | MOTOR - CONDENSOR FAN | 51 |
| 3B1 | COMPRESSOR | 15 |
| 3B1HR12 | HEATER - CRANKCASE | 12 |
| 3B2 | COMPRESSOR | 20 |
| 3B2HR13 | HEATER - CRANKCASE | 17 |
| 3B3 | COMPRESSOR | 26 |
| 3B3HR14 | HEATER - CRANKCASE | 23 |
| 3B4 | COMPRESSOR | 31 |
| 3B4HR15 | HEATER - CRANKCASE | 28 |

## CAUTION

USE COPPER CONDUCTORS ONLY!

UNIT TERMINALS ARE NOT DESIGNED TO ACCEPT OTHER TYPES OF CONDUCTORS.

FAILURE TO DO SO MAY CAUSE DAMAGE TO THE EQUIPMENT.

## ATTENTION

N'UTILISER QUE DES CONDUCTEURS EN CUIVRE!

LES BORNES DE L'UNITÉ NE SONT PAS CONÇUES POUR RECEVOIR D'AUTRES TYPES DE CONDUCTEURS.

L'UTILISATION DE TOUT AUTRE CONDUCTEUR PEUT ENDOMMAGER L'ÉQUIPEMENT.

## PRECAUCIÓN

¡UTILICE ÚNICAMENTE CONDUCTORES DE COBRE!

LAS TERMINALES DE LA UNIDAD NO ESTÁN DISEÑADAS PARA ACEPTAR OTROS TIPOS DE CONDUCTORES.

SI NO LO HACE, PUEDE OCASIONAR DAÑO AL EQUIPO.

NOTES:

1. UNLESS OTHERWISE NOTED, ALL SWITCHES ARE SHOWN AT 25°C ( 77°F), AT ATMOSPHERIC PRESSURE, AT 50% RELATIVE HUMIDITY, WITH ALL UTILITIES TURNED OFF, AND AFTER A NORMAL SHUTDOWN HAS OCCURRED.
2. DASHED LINES INDICATE RECOMMENDED FIELD WIRING BY OTHERS. DASHED LINE ENCLOSURES AND/OR DASHED DEVICE OUTLINES INDICATE COMPONENTS PROVIDED BY THE FIELD. PHANTOM LINE ENCLOSURES INDICATE ALTERNATE CIRCUITRY OR AVAILABLE SALES OPTIONS. SOLID LINE INDICATES WIRING BY TRANE CO.
3. NUMBERS ALONG THE RIGHT SIDE OF THE SCHEMATIC DESIGNATE THE LOCATION OF CONTACTS BY LINE NUMBER. AN UNDERLINED NUMBER INDICATES A NORMALLY CLOSED CONTACT. AN OPEN ARROWHEAD BELOW THE LINE NUMBER POINTING UPWARD INDICATES A TIMED CONTACT WHICH BEGINS TIMING WHEN ENERGIZED.

7 460 VOLT/60HZ AND 415 VOLT/50HZ TRANSFORMER (1T1) SHOWN. SEE INSET "A" FOR OTHER VOLTAGE CONNECTIONS.

8 CIRCUIT AS SHOWN IS FOR CUSTOMER SUPPLIED EVAP FAN. WHEN "EVP" OPTION IS REQUIRED, THIS CIRCUIT BECOMES A CIRCULATING PUMP. (MOTOR 5B1, CONTACTOR 5K1 AND SWITCH 5S1)

11 FOR 380V/415V/50HZ APPLICATIONS CUT JUMPER ON 1U3 PHASE MONITOR.

THIS DRAWING IS PROPRIETARY AND SHALL NOT BE COPIED OR ITS CONTENTS DISCLOSED TO OUTSIDE PARTIES WITHOUT THE CONSENT OF TRANE.

TRANE

DRAWN BY: T. DEPRIEST
TRANE® DATE: 7-22-08
REPLACES: 2307-4477
REVISION DATE: 1-11-10
CAD SYSTEM USED: PRO/DIAGRAM
SIMILAR TO: --

FILE NUMBER:

SPLIT SYSTEM CONDENSING UNIT DIAGRAM

POWER SCHEMATIC - RA 20-60 TON
SHEET 1 OF 2

DRAWING NUMBER: 2307-9116
SHEET: 1 OF 1
REV: C