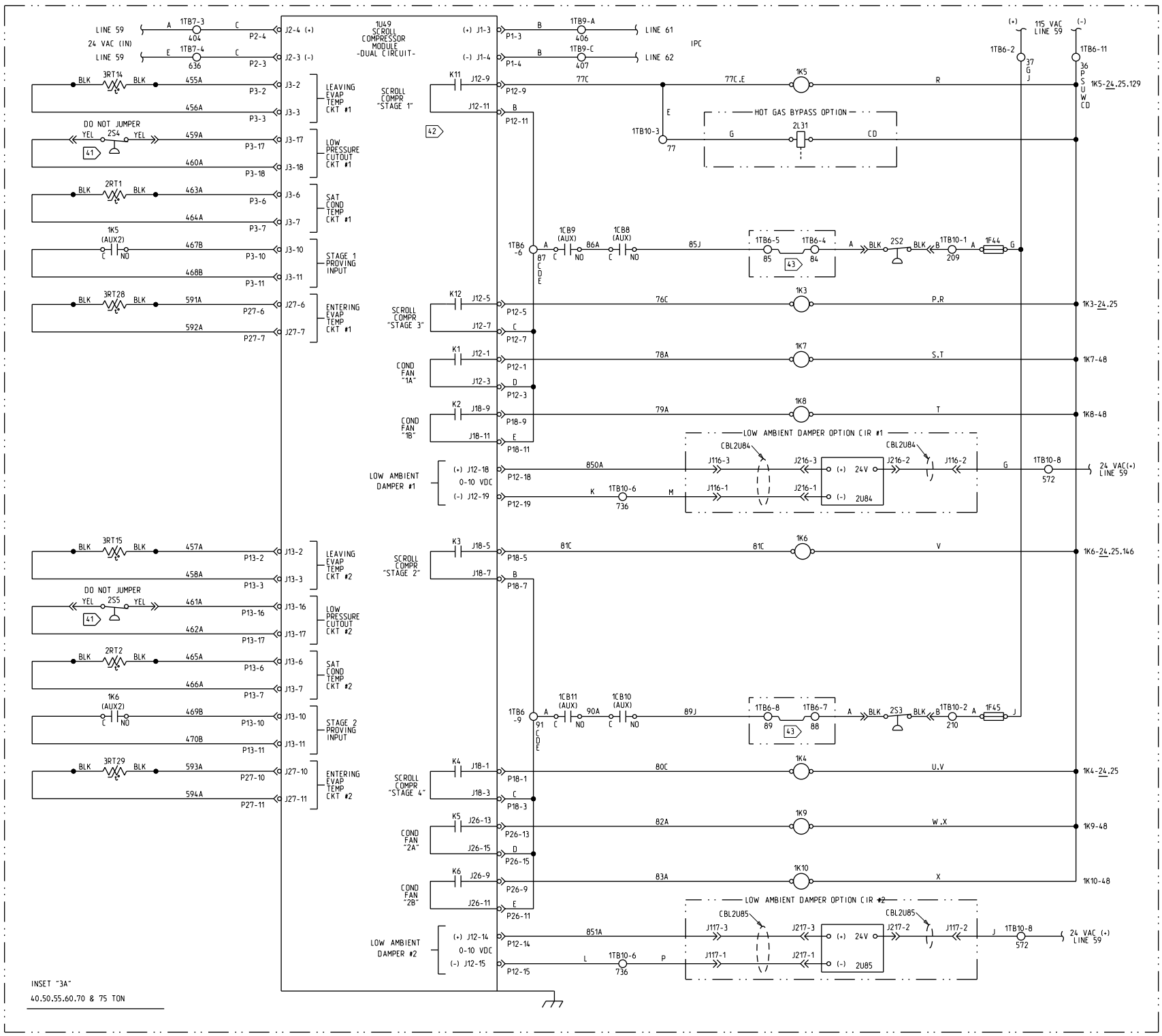

NOTES:

41 2S4 & 2S5 ARE LOW PRESSURE CUTOUT SWITCHES USED FOR COMPRESSOR PROTECTION (25 PSIG). CAUTION!! DO NOT JUMPER ACROSS SWITCH UNDER ANY CIRCUMSTANCES.

42 STAGING SHOWN WITH LEAD/LAG DISABLED.

43 FOR 40-70 TON UNITS, INSTALL METAL JUMPERS BETWEEN 1TB6-4 & 1TB6-5 (CIRCUIT #1) AND BETWEEN 1TB6-7 & 1TB6-8 (CIRCUIT #2).
FOR 75 TON UNITS, REFER TO INSET "3B" AND INSTALL COMPRESSOR PROTECTION MODULE WIRING BETWEEN 1TB6-4 & 1TB6-5 (CIRCUIT #1) AND BETWEEN 1TB6-7 & 1TB6-8 (CIRCUIT #2).

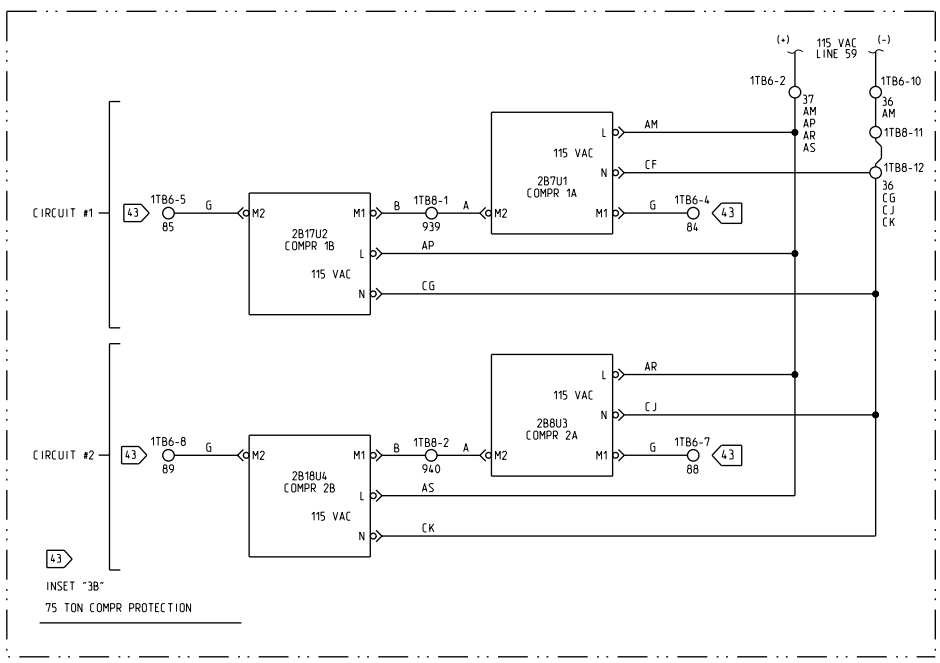

CAUTION	PRECAUCIÓN	ATTENTION
USE COPPER CONDUCTORS ONLY!	N'UTILISER QUE DES CONDUCTEURS EN CUIVRE!	¡UTILICE ÚNICAMENTE CONDUCTORES DE COBRE!
UNIT TERMINALS ARE NOT DESIGNED TO ACCEPT OTHER TYPES OF CONDUCTORS.	LES BORNES DE L'UNITÉ NE SONT PAS CONÇUES POUR RECEVOIR D'AUTRES TYPES DE CONDUCTEURS.	LAS TERMINALES DE LA UNIDAD NO ESTÁN DISEÑADAS PARA ACEPTAR OTROS TIPOS DE CONDUCTORES.
FAILURE TO DO SO MAY CAUSE DAMAGE TO THE EQUIPMENT.	L'UTILISATION DE TOUT AUTRE CONDUCTEUR PEUT ENDOMMAGER L'ÉQUIPEMENT.	SI NO LO HACE, PUEDE OCASIONAR DAÑO AL EQUIPO.

THIS DRAWING IS PROPRIETARY AND SHALL NOT BE COPIED OR ITS CONTENTS DISCLOSED TO OUTSIDE PARTIES WITHOUT THE CONSENT OF TRANE.

TRANE

DRAWN BY: T.DEPRIEST
TRANE® DATE: 08/29/08
REPLACES: --
REVISION DATE: --
CAD SYSTEM USED: Pro/DETAIL
SIMILAR TO: 2307-4603

FILE NUMBER:
DRAWING NUMBER: 2307-9115
SHEET: 1 OF 1
REV: A

ROOFTOP PACKAGED AIR CONDITIONER
DIAGRAM
SCHEMATIC- MULTIPLE CIRCUIT COMPRESSOR MODULE
RT 40-75 TON
SHEET 3 OF 5