OPTIONAL LOW AMBIENT DAMPER CONTROL

* * LEGEND * *		
DEVICE DESIGNATION	DESCRIPTION	LINE NUMBER
2T20	ACTUATOR TRANSFORMER	67
2T21	CONTROLLER TRANSFORMER	67
2TB34	TERMINAL BLOCK	
2TB35	TERMINAL BLOCK	
2U83	MODULATING HEAD PRESSURE CONTROLLER	70
5R13	VARIABLE SETPOINT RESISTOR NO.1	74
5R14	VARIABLE SETPOINT RESISTOR NO.2	81
8RT23	CONDENSING TEMP. SENSOR 1	72
8RT24	CONDENSING TEMP. SENSOR 2	79
8U44	LOW AMBIENT DAMPER ACTUATOR 1	72
8U45	LOW AMBIENT DAMPER ACTUATOR 2	79
CBLLAD	CABLE LOW AMBIENT DAMPER	73,80

DEVICE PREFIX LOCATION CODE	
AREA	LOCATION
1	INSIDE UNIT CONTROL BOX
2	CONDENSER SECTION
5	EXTERNAL FIELD MTD DEVICE
8	REMOTE AIR COOLED CONDENSER

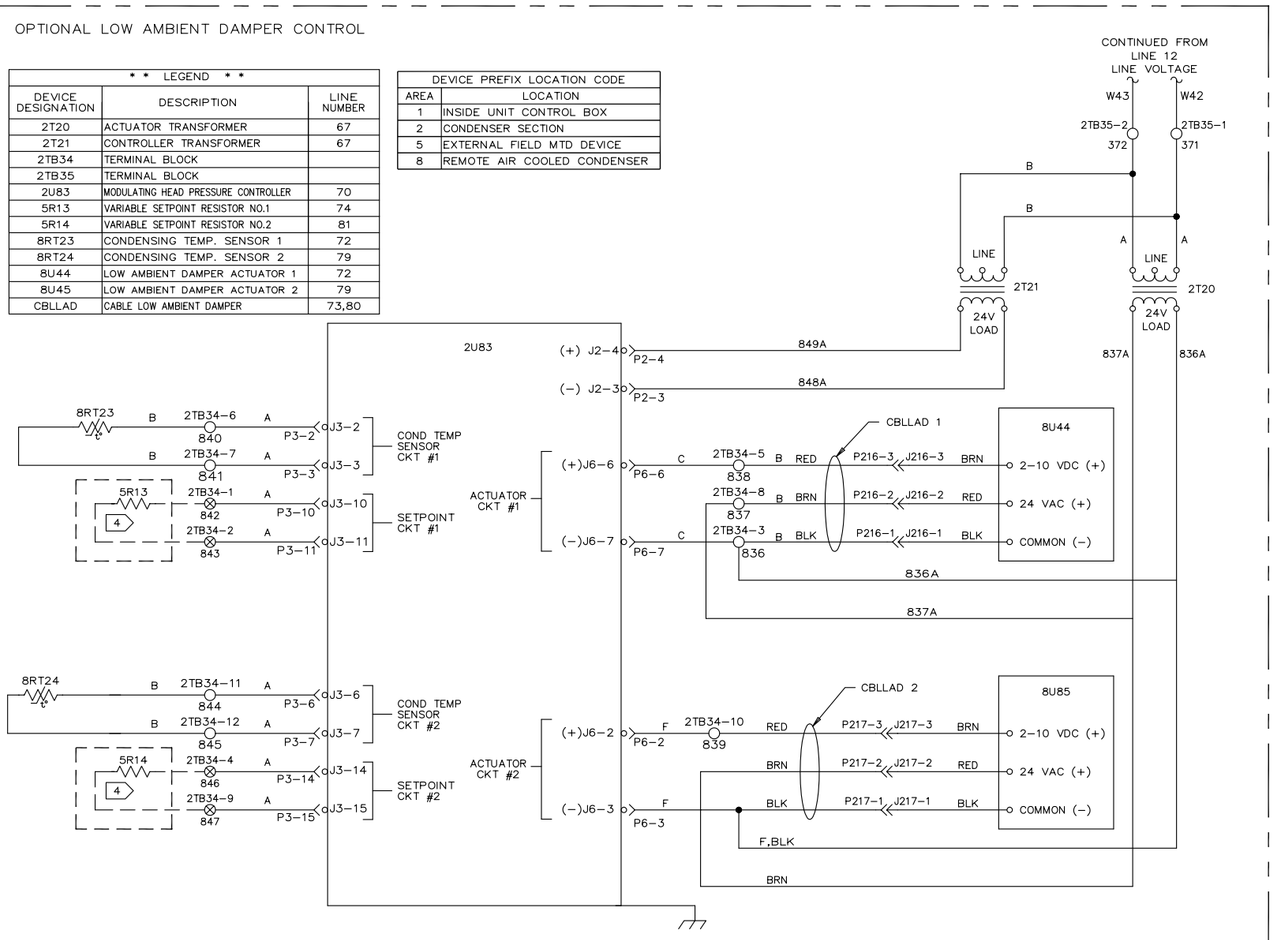

TABLE "A"

RESISTOR SET POINTS	
SET POINT	RESISTANCE
80°	1.87K Ω
85°	2.74K Ω
90°	3.74K Ω
95°	4.87K Ω
100°	6.34K Ω
105°	OPEN
110°	10.0K Ω
115°	12.7K Ω
120°	16.2K Ω
125°	20.5K Ω
130°	26.7K Ω
135°	36.5K Ω
140°	53.6K Ω

NOTES:

1. UNLESS OTHERWISE NOTED, ALL SWITCHES ARE SHOWN AT 25° C (77° F), AT ATMOSPHERIC PRESSURE, AT 50% RELATIVE HUMIDITY, WITH ALL UTILITIES TURNED OFF, AND AFTER A NORMAL SHUTDOWN HAS OCCURRED.
2. DASHED LINES INDICATE RECOMMENDED FIELD WIRING BY OTHERS. DASHED LINE ENCLOSURES AND/OR DASHED DEVICE OUTLINES INDICATE COMPONENTS PROVIDED BY THE FIELD. PHANTOM LINE ENCLOSURES INDICATE ALTERNATE CIRCUITRY OR AVAILABLE SALES OPTIONS. SOLID LINE INDICATES WIRING BY TRANE CO.
3. NUMBERS ALONG THE RIGHT SIDE OF THE SCHEMATIC DESIGNATE THE LOCATION OF CONTACTS BY LINE NUMBER. AN UNDERLINED NUMBER INDICATES A NORMALLY CLOSED CONTACT. AN OPEN ARROWHEAD BELOW THE LINE NUMBER POINTING UPWARD INDICATES A TIMED CONTACT WHICH BEGINS TIMING WHEN ENERGIZED.

4 REFER TO TABLE "A" FOR RESISTOR SET POINTS

NOTICE

USE COPPER CONDUCTORS ONLY!

UNIT TERMINALS ARE NOT DESIGNED TO ACCEPT OTHER TYPES OF CONDUCTORS.

FAILURE TO DO THE ABOVE COULD RESULT IN EQUIPMENT DAMAGE.

AVIS

N'UTILISER QUE DES CONDUCTEURS EN CUIVRE!

LES BORNES DE L'UNITÉ NE SONT PAS CONÇUES POUR RECEVOIR D'AUTRES TYPES DE CONDUCTEURS.

FAIRE DÉFAUT À LA PROCÉDURE CI-DESSUS PEUT ENTRAÎNER DES DOMMAGES À L'ÉQUIPEMENT.

AVISO

¡UTILICE ÚNICAMENTE CONDUCTORES DE COBRE!

LAS TERMINALES DE LA UNIDAD NO ESTÁN DISEÑADAS PARA ACEPTAR OTROS TIPOS DE CONDUCTORES.

NO SEGUIR LAS INSTRUCCIONES ANTERIORES PUEDE PROVOCAR DAÑOS EN EL EQUIPO.

⚠ WARNING

HAZARDOUS VOLTAGE!

DISCONNECT ALL ELECTRIC POWER INCLUDING REMOTE DISCONNECTS AND FOLLOW LOCK OUT AND TAG PROCEDURES BEFORE SERVICING. INSURE THAT ALL MOTOR CAPACITORS HAVE DISCHARGED STORED VOLTAGE. UNITS WITH VARIABLE SPEED DRIVE, REFER TO DRIVE INSTRUCTIONS FOR CAPACITOR DISCHARGE.

FAILURE TO DO THE ABOVE BEFORE SERVICING COULD RESULT IN DEATH OR SERIOUS INJURY.

⚠ AVERTISSEMENT

TENSION DANGEREUSE!

COUPER TOUTES LES TENSIONS ET OUVRIR LES SECTIONNEURS À DISTANCE, PUIS SUIVRE LES PROCÉDURES DE VERROUILLAGE ET DES ÉTIQUETTES AVANT TOUTE INTERVENTION. VÉRIFIER QUE TOUS LES CONDENSATEURS DES MOTEURS SONT DÉCHARGÉS. DANS LE CAS D'UNITÉS COMPORTANT DES ENTRAÎNEMENTS À VITESSE VARIABLE, SE REPORTER AUX INSTRUCTIONS DE L'ENTRAÎNEMENT POUR DÉCHARGER LES CONDENSATEURS.

NE PAS RESPECTER CES MESURES DE PRÉCAUTION PEUT ENTRAÎNER DES BLESSURES GRAVES POUVANT ÊTRE MORTELLES.

⚠ ADVERTENCIA

¡VOLTAJE PELIGROSO!

DESCONECTE TODA LA ENERGÍA ELÉCTRICA, INCLUSO LAS DESCONEXIONES REMOTAS Y SIGA LOS PROCEDIMIENTOS DE CIERRE Y ETIQUETADO ANTES DE PROCEDER AL SERVICIO. ASEGÚRESE DE QUE TODOS LOS CAPACITORES DEL MOTOR HAYAN DESCARGADO EL VOLTAJE ALMACENADO. PARA LAS UNIDADES CON EJE DE DIRECCIÓN DE VELOCIDAD VARIABLE, CONSULTE LAS INSTRUCCIONES PARA LA DESCARGA DEL CONDENSADOR.

EL NO REALIZAR LO ANTERIORMENTE INDICADO, PODRÍA OCASIONAR LA MUERTE O SERIAS LESIONES PERSONALES.

ECN SC5404 C
11/26/07
J. MEYER

DO NOT SCALE PRINT

THIRD ANGLE PROJECTION

THIS DRAWING IS PROPRIETARY AND SHALL NOT BE COPIED OR ITS CONTENTS DISCLOSED TO OUTSIDE PARTIES WITHOUT THE WRITTEN CONSENT OF TRANE

DRAWN BY: M. PETERS

© TRANE DATE: 10-NOV-98

TRANE

2307-8361

AIR COOLED CONDENSER UNIT

SCHEMATIC WIRING

FOR THERMOSTAT CONTROLLED UNITS WITH INDEPENDENT COMPRESSORS

20, 29 & 32 TON

SHEET 2 OF 2

REV C