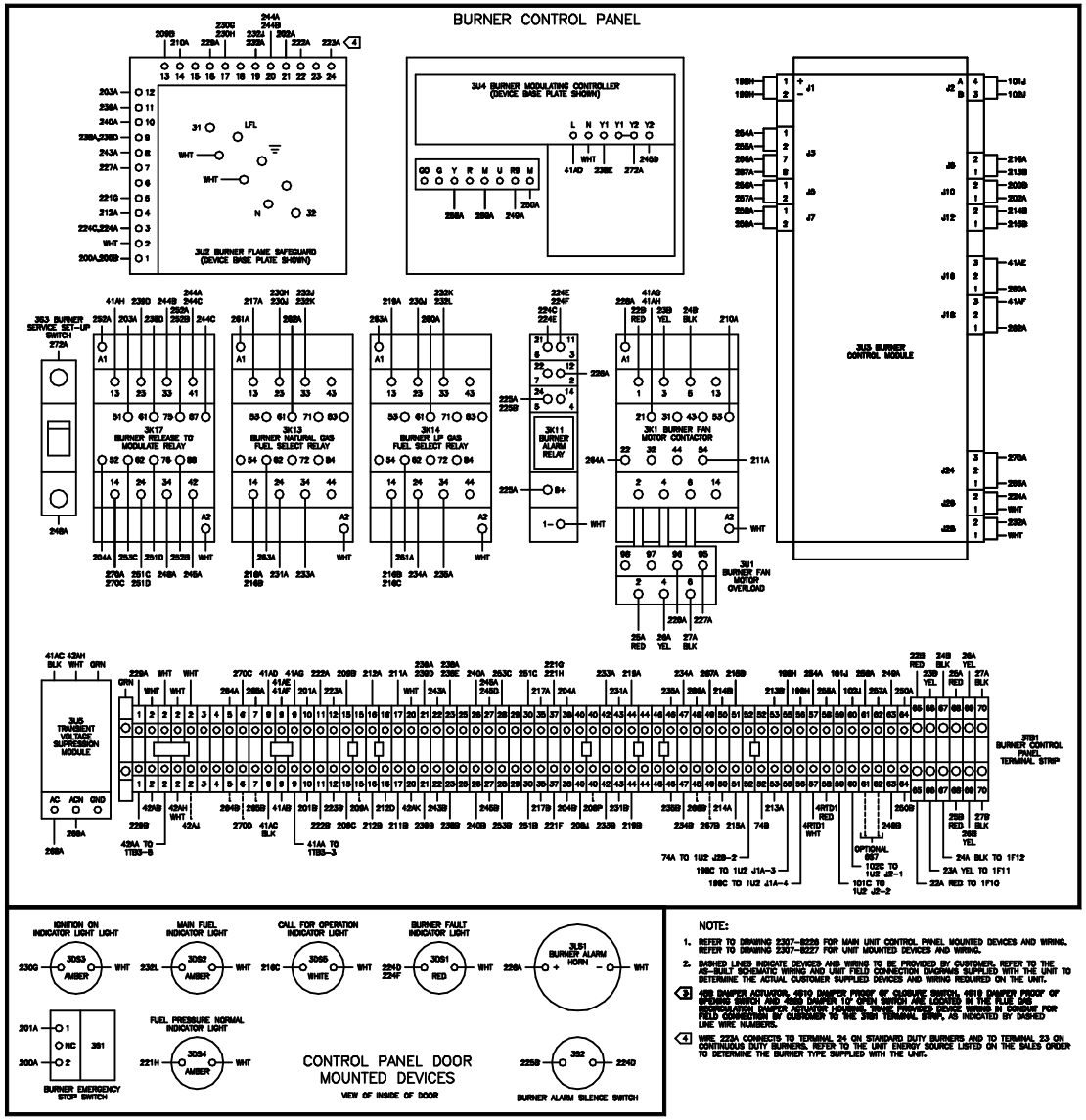

DEVICE PREFIX CODE:

1 = MAIN UNIT CONTROL PANEL
3 = BURNER CONTROL PANEL
4 = UNIT MOUNTED DEVICE
6 = CUSTOMER PROVIDED DEVICE

IF UNITS TOLERANCED, TRANS. ACD. EDITCD022 UNLESS OTHERWISE SPECIFIED	AUTOCAD DO NOT SCALE PRINT	THE TRANE COMPANY LA CROSSE, WISCONSIN
.X ±0.1 .XX ±0.03 .XXX ±0.010 ANGLES ±0 HOLE DIA ±0 CONFORMS TO ASME Y14.5M-1994	FINISH ✓	THIS INFORMATION CONTAINED IN THIS DRAWING IS THE SOLE PROPERTY OF THE TRANE COMPANY. ANY REPRODUCTION IN PART OR AS A WHOLE WITHOUT THE WRITTEN PERMISSION OF THE TRANE COMPANY IS PROHIBITED.
DRAWN BY K.J. KLUG DATE 6-1-97 SIZE 2307-8236		

2307-8236 B

CONNECTION DIAGRAM
BURNER WIRING VARIATION "F"
NATURAL GAS OR LP GAS
HORIZON ABDA 1350-1650 UNITS

- SHEET 3 OF 3 -

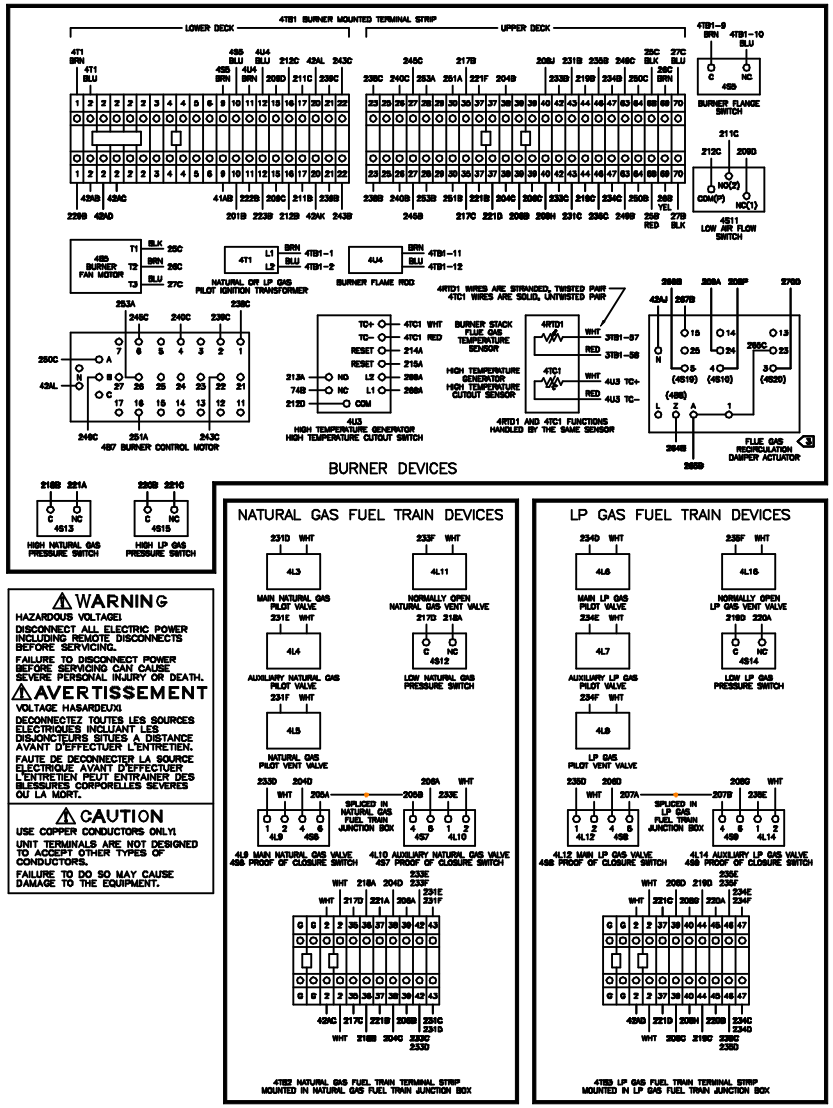

⚠ WARNING

HAZARDOUS VOLTAGE!

DISCONNECT ALL ELECTRIC POWER INCLUDING REMOTE DISCONNECTS BEFORE SERVICING.

FAILURE TO DISCONNECT POWER BEFORE SERVICING CAN CAUSE SEVERE PERSONAL INJURY OR DEATH.

⚠ AVERTISSEMENT

VOLTAGE HASARDEUX!

DECONNECTEZ TOUTES LES SOURCES ELECTRIQUES INCLUANT LES DISJONCTEURS SITUES A DISTANCE AVANT D'EFFECTUER L'ENTRETIEN.

FAUTE DE DECONNECTER LA SOURCE ELECTRIQUE AVANT D'EFFECTUER L'ENTRETIEN PEUT ENTRAINER DES BLESSURES CORPORELLES SEVERES OU LA MORT.

⚠ CAUTION

USE COPPER CONDUCTORS ONLY!

UNIT TERMINALS ARE NOT DESIGNED TO ACCEPT OTHER TYPES OF CONDUCTORS.

FAILURE TO DO SO MAY CAUSE DAMAGE TO THE EQUIPMENT.

NOTE:

1. REFER TO DRAWING 2307-8229 FOR MAIN UNIT CONTROL PANEL MOUNTED DEVICES AND WIRING. REFER TO DRAWING 2307-8227 FOR UNIT MOUNTED DEVICES AND WIRING.
2. DASHED LINES INDICATE DEVICES AND WIRING TO BE PROVIDED BY CUSTOMER. REFER TO THE AS-BUILT SCHEMATIC WIRING AND UNIT FIELD CONNECTION DIAGRAMS SUPPLIED WITH THE UNIT TO DETERMINE THE ACTUAL CUSTOMER SUPPLIED DEVICES AND WIRING REQUIRED ON THE UNIT.

3 4S6 DAMPER ACTUATOR, 4S10 DAMPER PROOF OF CLOSURE SWITCH, 4S13 DAMPER PROOF OF OPENING SWITCH AND 4S15 DAMPER 10° OPEN SWITCH ARE LOCATED IN THE FLUE GAS RECIRCULATION DAMPER ACTUATOR HOUSING. SOME PROVIDED DEVICE WIRING IN DANGER FOR FIELD CONNECTION BY CUSTOMER TO THE 3U51 TERMINAL STRIP, AS INDICATED BY DASHED LINE WIRE NUMBERS.

4 WIRE 223A CONNECTS TO TERMINAL 24 ON STANDARD DUTY BURNERS AND TO TERMINAL 23 ON CONTINUOUS DUTY BURNERS. REFER TO THE UNIT ENERGY SOURCE LISTED ON THE SALES ORDER TO DETERMINE THE BURNER TYPE SUPPLIED WITH THE UNIT.