DEVICE PREFIX CODE:

1 = MAIN UNIT CONTROL PANEL
3 = BURNER CONTROL PANEL
4 = UNIT MOUNTED DEVICE
6 = CUSTOMER PROVIDED DEVICE

IF UNITS DELIVERED TEAR RED EXTENSION UNDER SHIPPING LABEL

ANGLES ±5 HOLE DIA ±.5

CONFORMS TO ASME Y14.5M-1994

AUTOCAD DO NOT SCALE PRINT

DRAWN BY: T.J. ROLUS
DATE: 9-1-97
SCALE: N/A
DRAWING NO. 2307-8232

THE TRANE COMPANY
LACROSSE, WISCONSIN

2307-8235 REV B

CONNECTION DIAGRAM
BURNER WIRING VARIATION "H"
NATURAL GAS OR OIL
HORIZON AIDA 1200-1600 UNITS

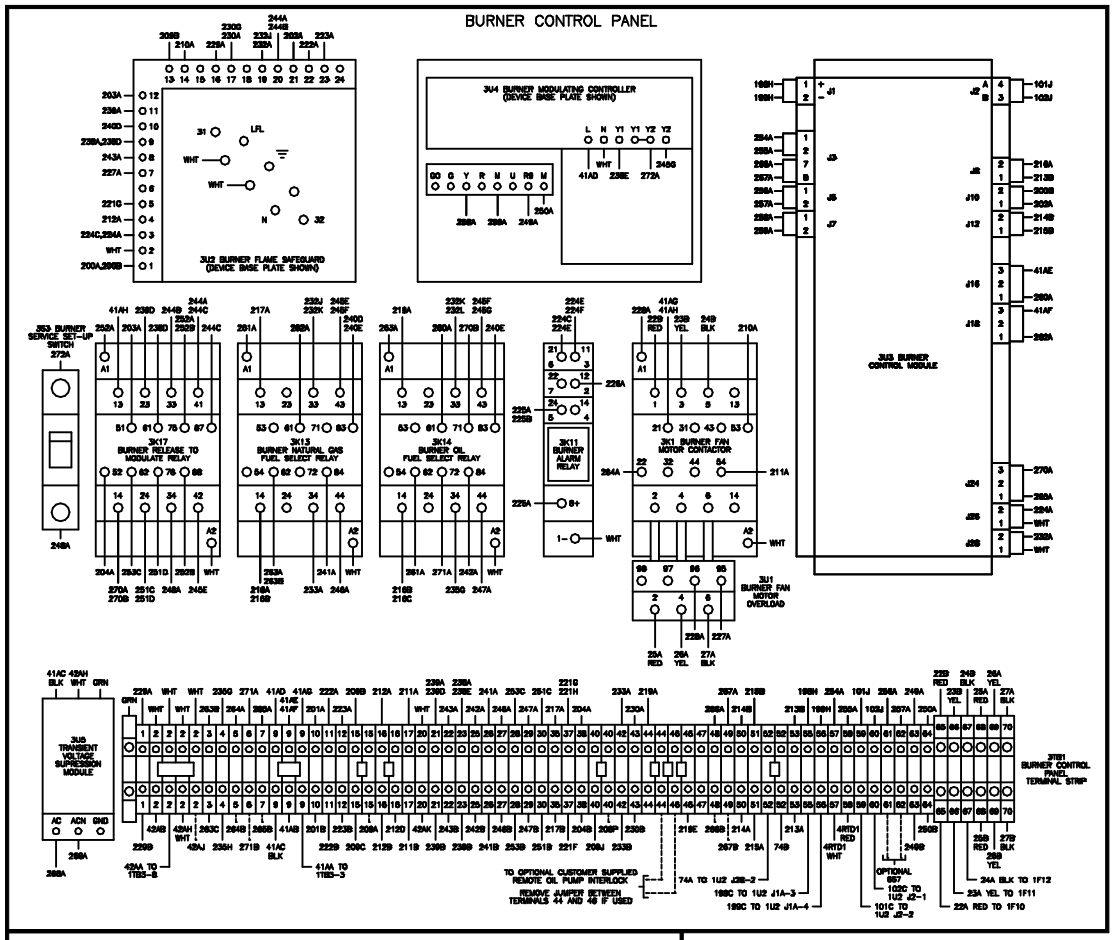

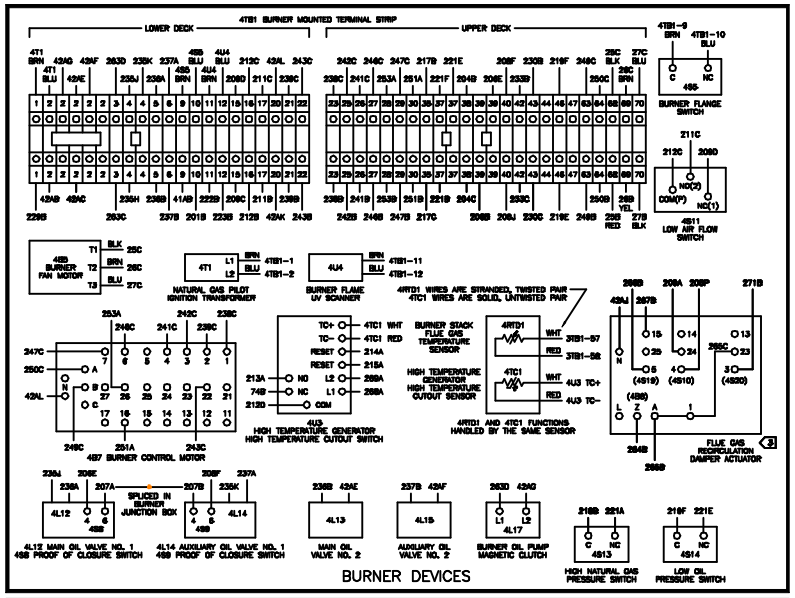

BURNER DEVICES

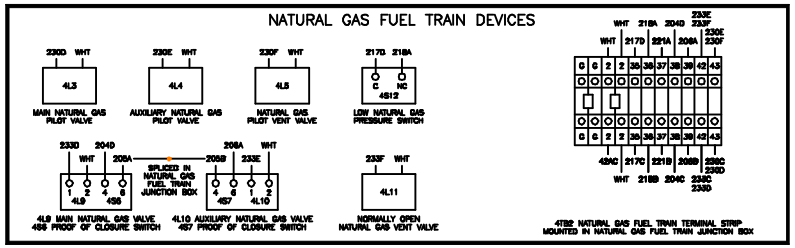

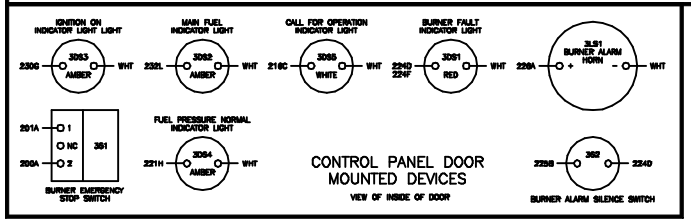

CONTROL PANEL DOOR MOUNTED DEVICES

VIEW OF INSIDE OF DOOR

NOTE:

1. REFER TO DRAWING 2307-8236 FOR MAIN UNIT CONTROL PANEL MOUNTED DEVICES AND WIRING. REFER TO DRAWING 2307-8237 FOR UNIT MOUNTED DEVICES AND WIRING.
2. DASHED LINES INDICATE DEVICES AND WIRING TO BE PROVIDED BY CUSTOMER. REFER TO THE AS-BUILT SCHEMATIC WIRING AND UNIT FIELD CONNECTION DIAGRAMS SUPPLIED WITH THE UNIT TO DETERMINE THE ACTUAL CUSTOMER SUPPLIED DEVICES AND WIRING REQUIRED ON THE UNIT.

3 AIR DAMPER ACTUATOR, 4S10 DAMPER PROOF OF CLOSURE SWITCH, 4S12 DAMPER PROOF OF OPENING SWITCH AND GAS SAMPLE TUBE OPEN SWITCH ARE LOCATED IN THE FLUE GAS RECIRCULATION DAMPER ACTUATOR HOUSING. THESE PROVIDED DEVICE WIRES IN CONDUIT FOR FIELD CONNECTION BY CUSTOMER TO THE 3TB1 TERMINAL STRIP, AS INDICATED BY DASHED LINE WIRE NUMBERS.

⚠ WARNING

HAZARDOUS VOLTAGE!

DISCONNECT ALL ELECTRIC POWER INCLUDING REMOTE DISCONNECTS BEFORE SERVICING.

FAILURE TO DISCONNECT POWER BEFORE SERVICING CAN CAUSE SEVERE PERSONAL INJURY OR DEATH.

⚠ AVERTISSEMENT

VOLTAGE HASARDEUX!

DECONNECTEZ TOUTES LES SOURCES ELECTRIQUES INCLUANT LES DISJONCTEURS SITUES A DISTANCE AVANT D'EFFECTUER L'ENTRETIEN.

FAUTE DE DECONNECTER LA SOURCE ELECTRIQUE AVANT D'EFFECTUER L'ENTRETIEN PEUT ENTRAINER DES BLESSURES CORPORELLES SEVERES OU LA MORT.

⚠ CAUTION

USE COPPER CONDUCTORS ONLY!

UNIT TERMINALS ARE NOT DESIGNED TO ACCEPT OTHER TYPES OF CONDUCTORS.

FAILURE TO DO SO MAY CAUSE DAMAGE TO THE EQUIPMENT.