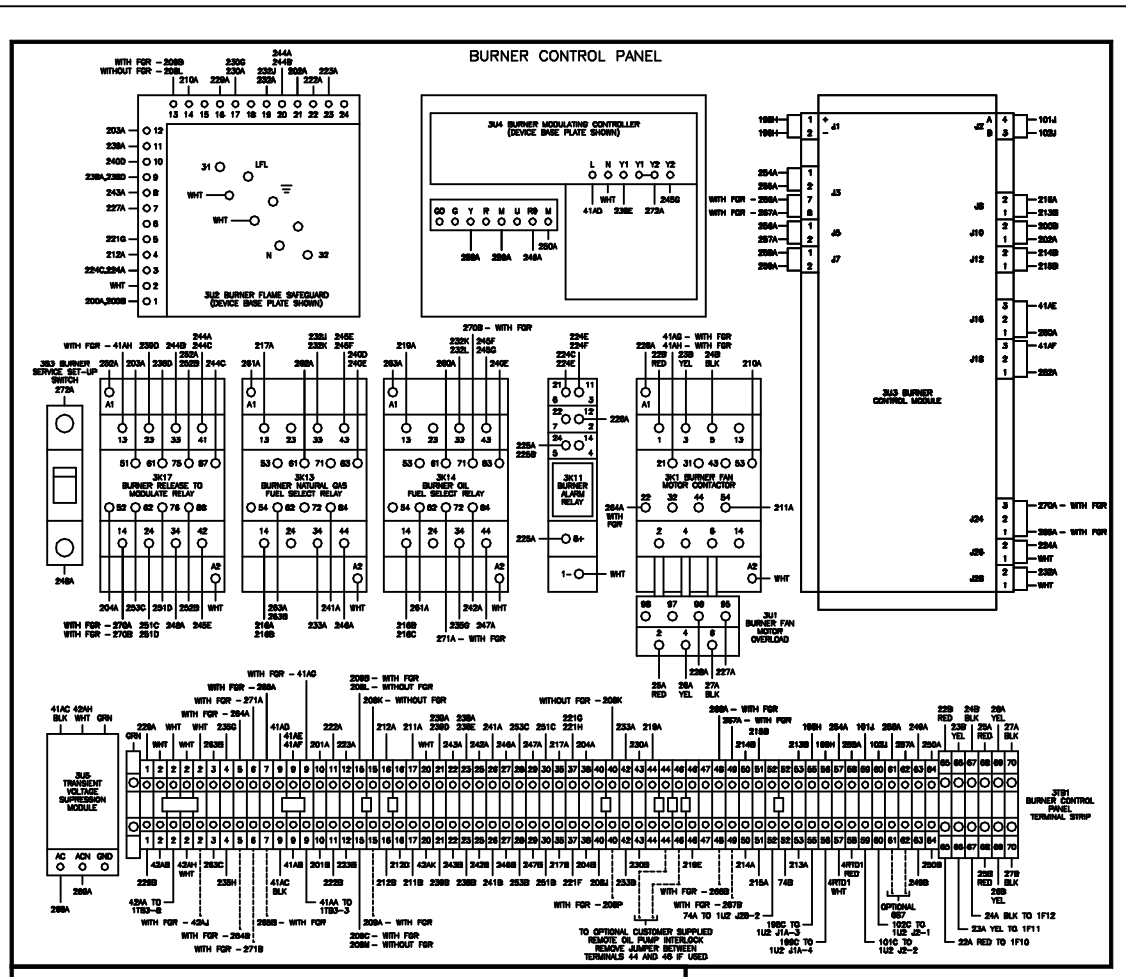

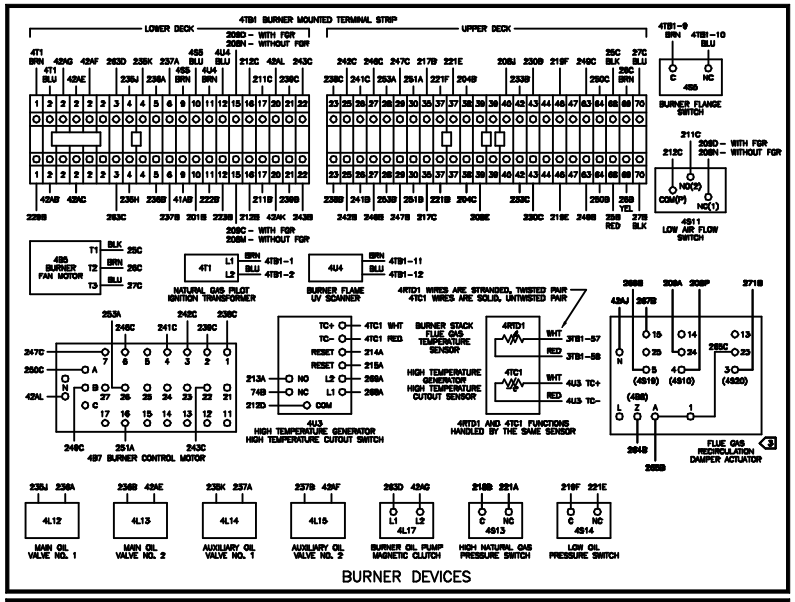

BURNER DEVICES

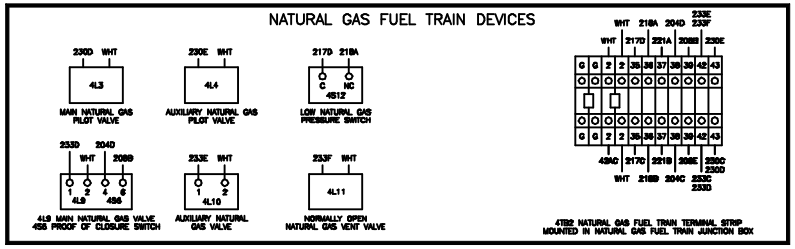

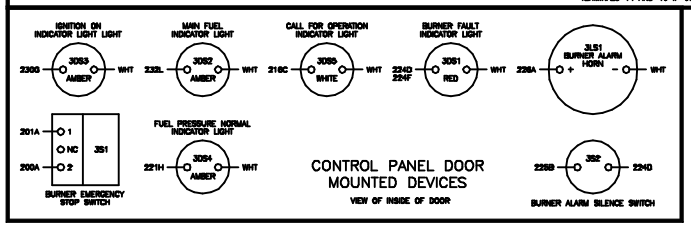

NOTE:

1. REFER TO DRAWING 2307–8226 FOR MAIN UNIT CONTROL PANEL MOUNTED DEVICES AND WIRING. REFER TO DRAWING 2307–8227 FOR UNIT MOUNTED DEVICES AND WIRING.
2. DASHED LINES INDICATE DEVICES AND WIRING TO BE PROVIDED BY CUSTOMER. REFER TO THE AS–BUILT SCHEMATIC WIRING AND UNIT FIELD CONNECTION DIAGRAMS SUPPLIED WITH THE UNIT TO DETERMINE THE ACTUAL CUSTOMER SUPPLIED DEVICES AND WIRING REQUIRED ON THE UNIT.

3. FLUE GAS RECIRCULATION (FGR) CIRCUITRY IS PROVIDED ON 250 THRU 500 TON UNITS ONLY WITH ULTRA LOW–NOx (<30 PPM) BURNER OR OIL 575 THRU 1150 TON UNITS ONLY WITH LOW–NOx (<20 PPM) BURNER. AN FGR DAMPER ACTUATOR, 4S10 (DAMPER PROOF OF CLOSURE SWITCH), 4S10 (DAMPER PROOF OF OPENING SWITCH) AND 4S9(2) DAMPER TO OPEN SWITCH ARE LOCATED IN THE FLUE GAS RECIRCULATION DAMPER ACTUATOR ASSEMBLY. THESE PROVIDED DEVICES WIRING IS CONSIDERED FOR FIELD CONNECTION BY CUSTOMER TO THE 3TB1 TERMINAL STRIP, AS INDICATED BY DASHED LINE WIRE NUMBERS.

DEVICE PREFIX CODE:

1 = MAIN UNIT CONTROL PANEL
3 = BURNER CONTROL PANEL
4 = UNIT MOUNTED DEVICE
5 = CUSTOMER PROVIDED DEVICE

IF UNITS TO BE MARKED, TRANE STD 00103002 UNLESS OTHERWISE SPECIFIED
DO NOT SCALE PRINT
FINISH
ANGLES ±0 HOLE DIA ±0
CONFORMS TO ASME Y14.5M–1994

AUTOCAD
DO NOT SCALE PRINT
DRAWN K.M. KOLKS
DATE 8–1–97
SHEET NO. 2307–8233

THE TRANE COMPANY
A DIVISION OF AMERICAN STANDARD INC.

2307–8232 REV B

CONNECTION DIAGRAM
BURNER WIRING VARIATION "E"
NATURAL GAS OR OIL
HORIZON AGDA 220–1150 UNITS

– SHEET 3 OF 3 –

⚠ WARNING
HAZARDOUS VOLTAGE!
DISCONNECT ALL ELECTRIC POWER INCLUDING REMOTE DISCONNECTS BEFORE SERVICING.
FAILURE TO DISCONNECT POWER BEFORE SERVICING CAN CAUSE SEVERE PERSONAL INJURY OR DEATH.

⚠ AVERTISSEMENT
VOLTAGE HASARDEUX!
DECONNECTEZ TOUTES LES SOURCES ELECTRIQUES INCLUANT LES DISJONCTEURS SITUES À DISTANCE AVANT D'EFFECTUER L'ENTRETIEN.
FAUTE DE DECONNECTER LA SOURCE ELECTRIQUE AVANT D'EFFECTUER L'ENTRETIEN PEUT ENTRAINER DES BLESSURES CORPORELLES SEVERES OU LA MORT.

⚠ CAUTION
USE COPPER CONDUCTORS ONLY!
UNIT TERMINALS ARE NOT DESIGNED TO ACCEPT OTHER TYPES OF CONDUCTORS.
FAILURE TO DO SO MAY CAUSE DAMAGE TO THE EQUIPMENT.