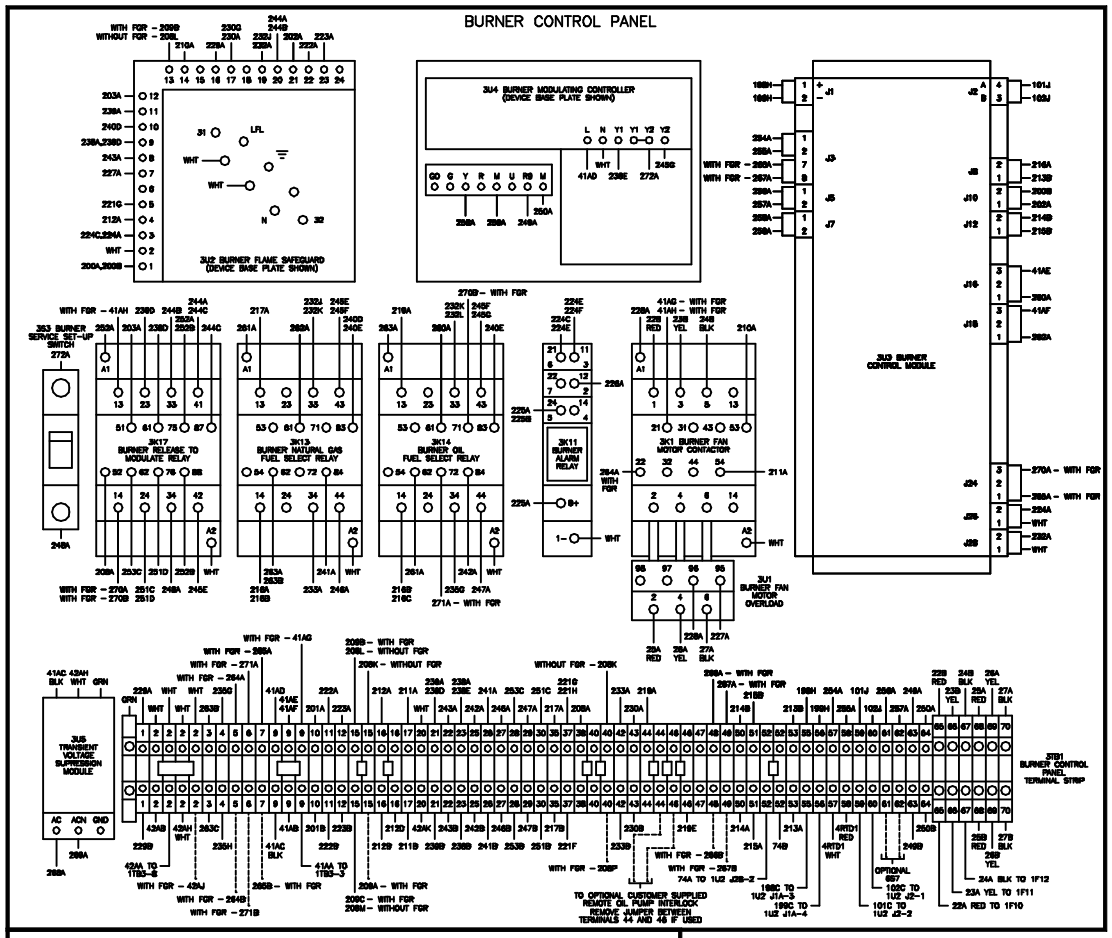

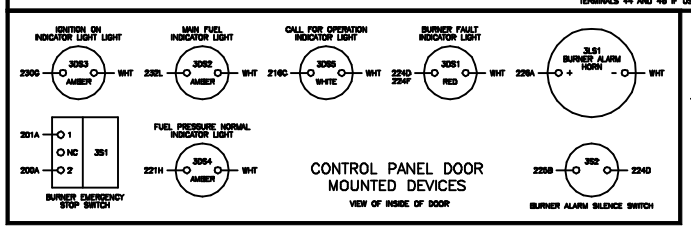

NOTE:

1. REFER TO DRAWING 2307–2225 FOR MAIN UNIT CONTROL PANEL MOUNTED DEVICES AND WIRING. REFER TO DRAWING 2307–2227 FOR UNIT MOUNTED DEVICES AND WIRING.
2. DASHED LINES INDICATE DEVICES AND WIRING TO BE PROVIDED BY CUSTOMER. REFER TO THE AS-BUILT SCHEMATIC WIRING AND UNIT FIELD CONNECTION DIAGRAMS SUPPLIED WITH THE UNIT TO DETERMINE THE ACTUAL CUSTOMER SUPPLIED DEVICES AND WIRING REQUIRED ON THE UNIT.

3 FLUE GAS RECIRCULATION (FGR) CIRCUITRY IS PROVIDED ON 130 THRU 180 TON UNITS ONLY WITH ULTRA LOW-NOx (LSI) FOUR SEASONS, 486 DAMPER ACTUATOR, 2619 DAMPER PROOF OF CLOSURE SWITCH, 4916 DAMPER PROOF OF OPENING SWITCH AND 4895 DAMPER TO DRIVE SWITCH ARE LOCATED IN THE FLUE GAS RECIRCULATION DAMPER ACTUATOR HOUSING. THESE PROVIDED DEVICE WIRING IN CONDUIT FOR FIELD CONNECTION BY CUSTOMER TO THE 2TB1 TERMINAL STRIP, AS INDICATED BY DASHED LINE WIRE NUMBERS.

DEVICE PREFIX CODE:

1 = MAIN UNIT CONTROL PANEL
3 = BURNER CONTROL PANEL
4 = UNIT MOUNTED DEVICE
6 = CUSTOMER PROVIDED DEVICE

IF UNITS TOLERANCES: TRANE STD 210100002 UNLESS OTHERWISE SPECIFIED
X ±0.1
XX ±0.03
XXX ±0.01
ANGLES ±0
HOLE DIA ±0
CONFORMS TO ASME Y14.5M-1994
FINISH
AUTOCAD DO NOT SCALE PRINT
DRAWN BY Y.H. KOLIS
DATE 8-1-97
THE TRANE COMPANY LA CROSSE, WISCONSIN
2307–8229
REV B
CONNECTION DIAGRAM
BURNER WIRING VARIATION "B"
NATURAL GAS OR OIL
HORIZON ABDA 130–180 UNITS
– SHEET 3 OF 3 –

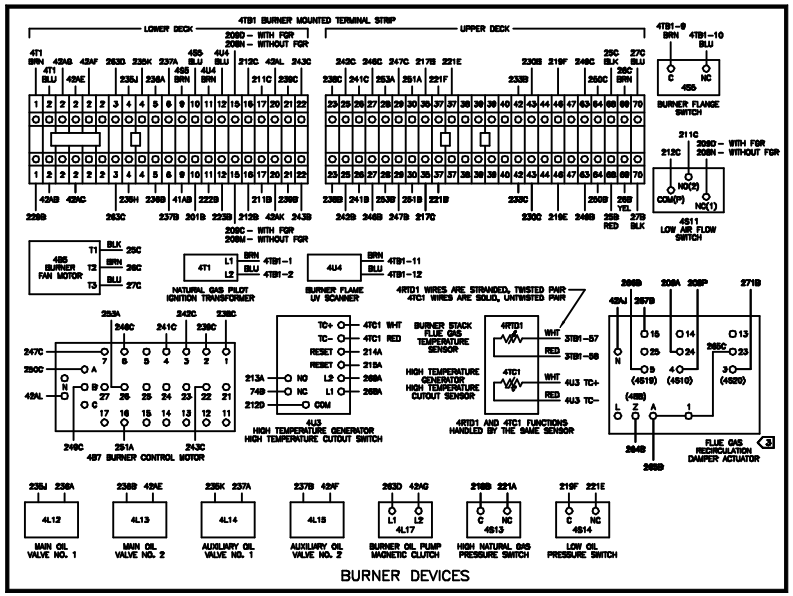

BURNER DEVICES

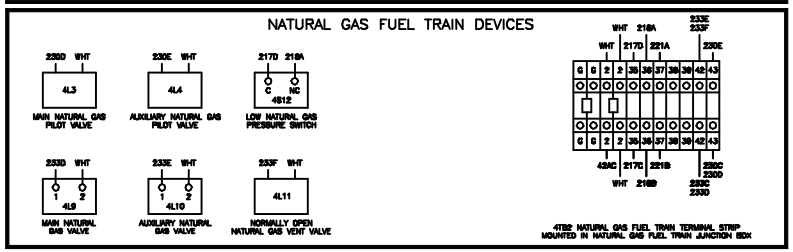

⚠ WARNING

HAZARDOUS VOLTAGE!

DISCONNECT ALL ELECTRIC POWER INCLUDING REMOTE DISCONNECTS BEFORE SERVICING.

FAILURE TO DISCONNECT POWER BEFORE SERVICING CAN CAUSE SEVERE PERSONAL INJURY OR DEATH.

⚠ AVERTISSEMENT

VOLTAGE HASARDEUX!

DECONNECTEZ TOUTES LES SOURCES ELECTRIQUES INCLUANT LES DISJONCTEURS SITUES A DISTANCE AVANT D'EFFECTUER L'ENTRETIEN.

FAUTE DE DECONNECTER LA SOURCE ELECTRIQUE AVANT D'EFFECTUER L'ENTRETIEN PEUT ENTRAINER DES BLESSURES CORPORELLES SEVERES OU LA MORT.

⚠ CAUTION

USE COPPER CONDUCTORS ONLY!

UNIT TERMINALS ARE NOT DESIGNED TO ACCEPT OTHER TYPES OF CONDUCTORS.

FAILURE TO DO SO MAY CAUSE DAMAGE TO THE EQUIPMENT.