ABSORPTION LIQUID CHILLER

TRANE®

ABDA HORIZON™ TWO-STAGE DIRECT-FIRED ABSORPTION
UNIT SCHEMATIC WIRING DIAGRAM
BURNER CONTROL MODULE AND NATURAL GAS OR OIL WEISHAUPT BURNER VARIATION "E"
DATE: 12-18-95 ABDA 220 THRU 1150 UNITS WITH CSD-1, FM, IRI, NFPA OR UL FUEL TRAIN AGENCY APPROVAL

DRAWING NUMBER 2307-8208 REV E

SHEET 4 OF 6

NOTE:
1. SOLID LINES INDICATE WIRING BY THE TRANE COMPANY AND DASHED LINES INDICATE FIELD WIRING PROVIDED BY CUSTOMER. REFER TO UNIT FIELD WIRING LAYOUT AND CONNECTION DIAGRAMS TO DETERMINE THE ACTUAL CUSTOMER SUPPLIED DEVICES AND WIRING REQUIRED ON THE UNIT.
2. NUMBERS ALONG THE RIGHT SIDE OF THE SCHEMATIC DESIGNATE THE LOCATION OF DEVICE CONTACTS BY LINE NUMBER. AN UNDERLINED NUMBER INDICATES A NORMALLY CLOSED CONTACT.

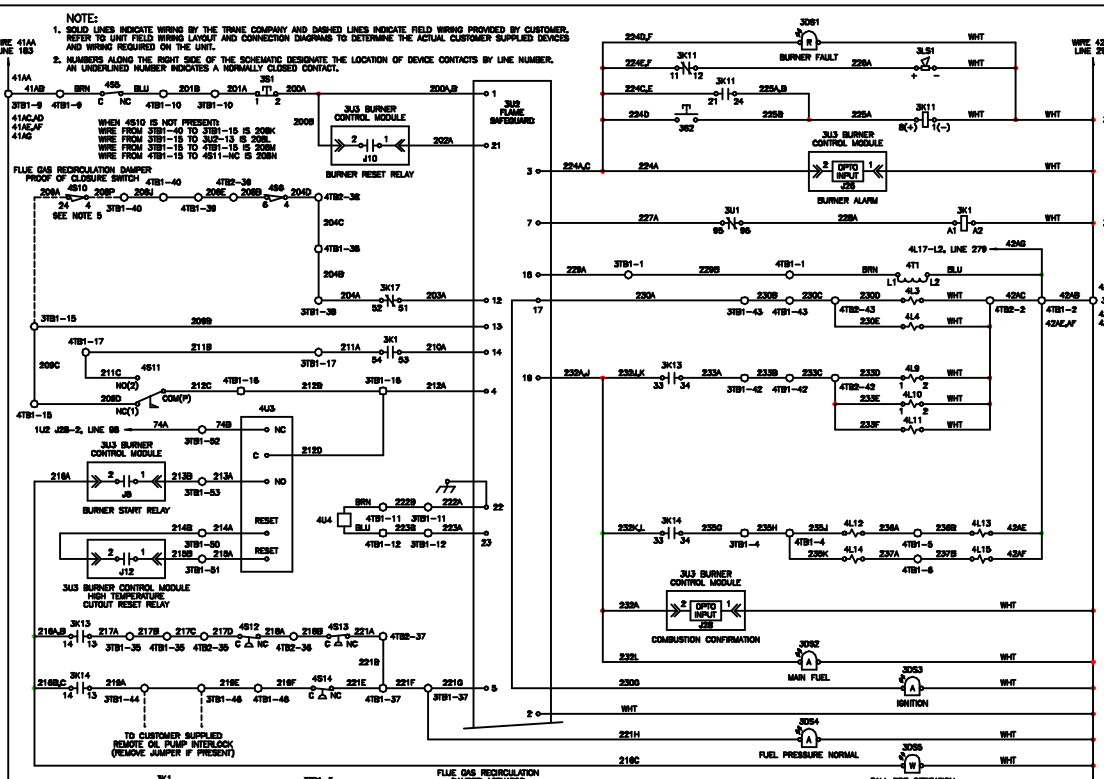

NOTE:
3. UNLESS OTHERWISE SPECIFIED, ALL SWITCHES ARE SHOWN AT 25°C (77°F), AT ATMOSPHERIC PRESSURE, AT 50% RELATIVE HUMIDITY, WITH ALL UTILITIES TURNED OFF AND AFTER A NORMAL SHUTDOWN HAS OCCURRED.
4. ALL TRANE DEVICES AND ASSOCIATED WIRING MARKED AS OPTIONAL MAY NOT BE PRESENT ON THE UNIT UNLESS REQUIRED BY CONTROL OPTIONS SPECIFIED ON THE SALES ORDER. REFER TO THE AS-BUILT SCHEMATIC WIRING DIAGRAM SUPPLIED WITH THE UNIT TO DETERMINE OPTIONAL TRANE DEVICES AND WIRING ACTUALLY SUPPLIED ON THE UNIT.

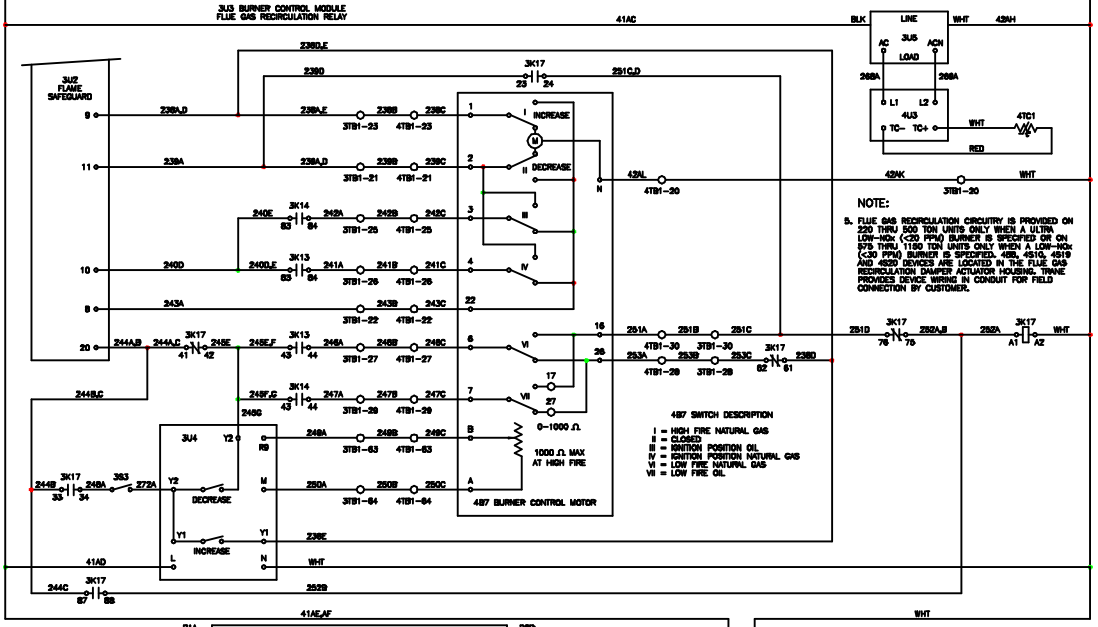

NOTE:
5. FLUE GAS RECIRCULATION CIRCUITRY IS PROVIDED ON 220 THRU 500 TON UNITS ONLY WHEN A ULTRA LOW-NOx (<20 PPM) BURNER IS SPECIFIED OR ON 575 THRU 1100 TON UNITS ONLY WHEN A LOW-NOx (<30 PPM) BURNER IS SPECIFIED. 4S8, 4S10, 4S19 AND 4S20 DEVICES ARE LOCATED IN THE FLUE GAS RECIRCULATION DAMPER ACTUATOR HOUSING. TRANE PROVIDES DEVICE WIRING IN CONDUIT FOR FIELD CONNECTION BY CUSTOMER.

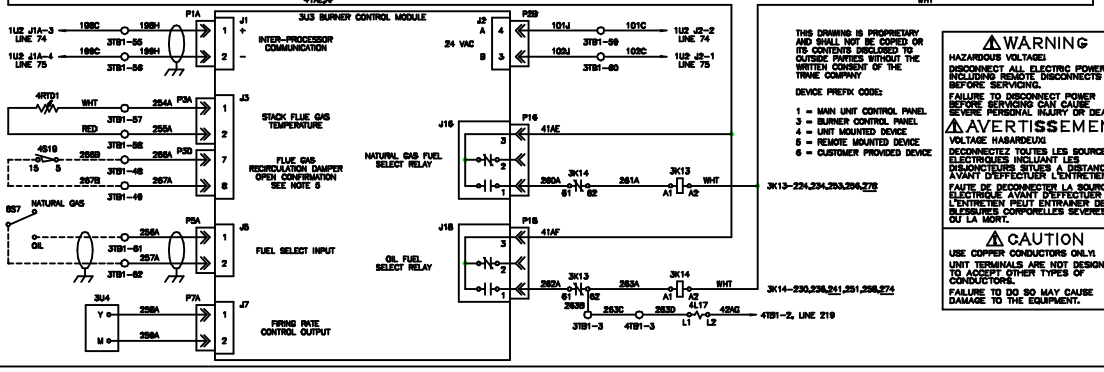

THIS DRAWING IS PROPRIETARY AND SHALL NOT BE COPIED OR ITS CONTENTS DISCLOSED TO OUTSIDE PARTIES WITHOUT THE WRITTEN CONSENT OF THE TRANE COMPANY

DEVICE PREFIX CODE:

1 = MAIN UNIT CONTROL PANEL
3 = BURNER CONTROL PANEL
4 = UNIT MOUNTED DEVICE
5 = REMOTE MOUNTED DEVICE
6 = CUSTOMER PROVIDED DEVICE

⚠ WARNING

HAZARDOUS VOLTAGE!
DISCONNECT ALL ELECTRIC POWER INCLUDING REMOTE DISCONNECTS BEFORE SERVICING.
FAILURE TO DISCONNECT POWER BEFORE SERVICING CAN CAUSE SEVERE PERSONAL INJURY OR DEATH.

⚠ AVERTISSEMENT

VOLTAGE HASARDEUX!
DECONNECTEZ TOUTES LES SOURCES ELECTRIQUES INCLUANT LES DISJONCTEURS SITUES A DISTANCE AVANT D'EFFECTUER L'ENTRETIEN.
FAUTE DE DECONNECTER LA SOURCE ELECTRIQUE AVANT D'EFFECTUER L'ENTRETIEN PEUT ENTRAINER DES BLESSURES CORPORELLES SEVERES OU LA MORT.

⚠ CAUTION

USE COPPER CONDUCTORS ONLY!
UNIT TERMINALS ARE NOT DESIGNED TO ACCEPT OTHER TYPES OF CONDUCTORS.
FAILURE TO DO SO MAY CAUSE DAMAGE TO THE EQUIPMENT.