HERMETIC CENTRIFUGAL LIQUID CHILLER

CENTRAVAC®
UCP2 SCHEMATIC WIRING CVHE, CVHF, CVHG
REMOTE AUTO TRANSFORMER STARTER

TRANE™

Date:02-09-96

DRAWING NUMBER 2307-5203 REV A

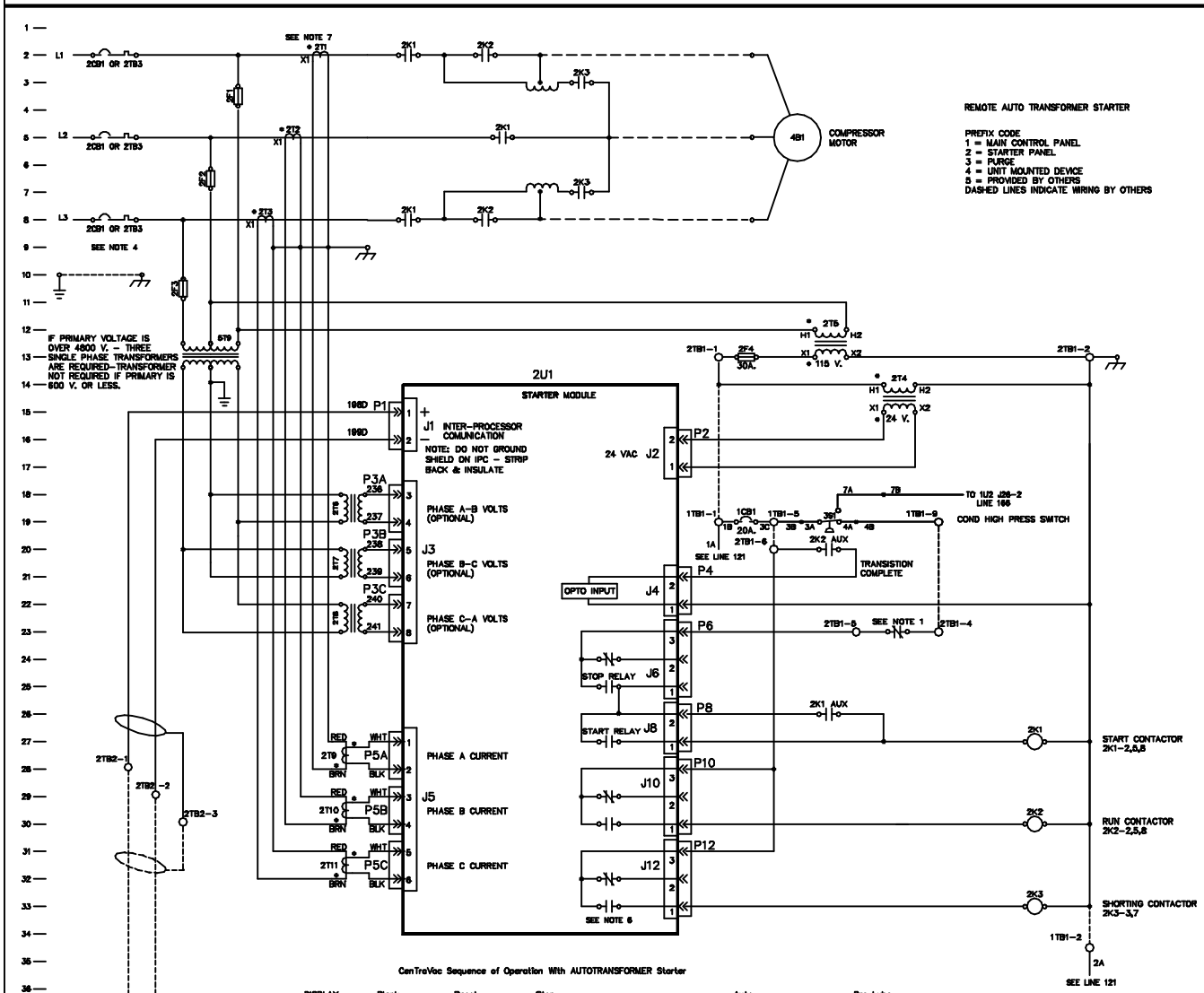

REMOTE AUTO TRANSFORMER STARTER

PREFIX CODE
1 = MAIN CONTROL PANEL
2 = STARTER PANEL
3 = PURGE
4 = UNIT MOUNTED DEVICE
5 = PROVIDED BY OTHERS
DASHED LINES INDICATE WIRING BY OTHERS

CenTraVac Sequence of Operation With AUTOTRANSFORMER Starter

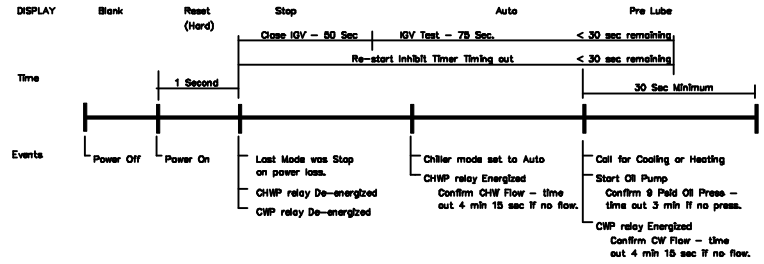

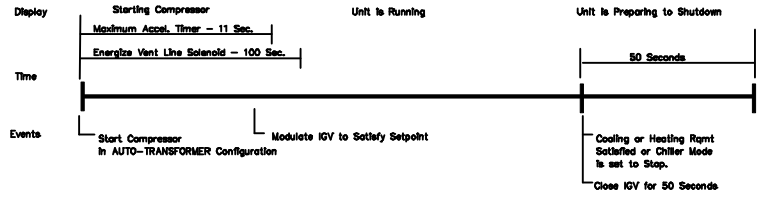

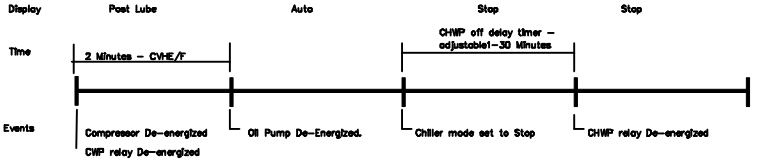

NOTES:
1. OPTIONAL STARTER INTERLOCK. SEE STARTER MANUFACTURES WIRING DIAGRAM FOR SPECIFIC APPLICATION.
2. UNLESS OTHERWISE NOTED,ALL SWITCHES ARE SHOWN AT 25 C (77 F), AT ATMOSPHERIC PRESSURE, AT 50% RELITIVE HUMIDTY, WITH ALL UTILITIES TURNED OFF AND AFTER A NORMAL SHUTDOWN HAS OCCURED.
3. NUMBERS ALONG THE RIGHT SIDE OF THE SCHEMATIC DESIGNATE THE LOCATION OF THE CONTACTS BY LINE NUMBER. AN UNDERLINED NUMBER INDICATES A NORMALLY CLOSED CONTACT.
4. THREE PHASE POWER SUPPLY VOLTAGE-SEE UNIT NAMEPLATE
5. REMOTE AUTO TRANSFORMER STARTER WIRING BETWEEN STARTER AND CONTROL MODULE ARE SHOWN. SEE STARTER MANUFACTURES WIRING DIAGRAM FOR SPECIFIC STARTER WIRING.
6. RELAY COILS ARE NOT SHOWN. CONTACTS ARE CONTROLLED BY THE LOGIC OF THE MICRO-CONTROLLER. SEE SEQUENCE OF OPERATION.
7. POLARITY MARKING ON THE CURRENT TRANSFORMER , (H1 MARKING ON CT) MUST BE FACING TOWARDS THE INCOMING CURRENT.

⚠WARNING
HAZARDOUS VOLTAGE!
DISCONNECT ALL ELECTRIC POWER INCLUDING REMOTE DISCONNECTS BEFORE SERVICING.
FAILURE TO DISCONNECT POWER BEFORE SERVICING CAN CAUSE SEVERE PERSONAL INJURY OR DEATH.

⚠AVERTISSEMENT
VOLTAGE HASARDEUX!
DECONNECTEZ TOUTES LES SOURCES ÉLECTRIQUES INCLUANT LES DISJONCTEURS SITUÉS À DISTANCE AVANT D'EFFECTUER L'ENTRETIEN.
FAUTE DE DECONNECTER LA SOURCE ÉLECTRIQUE AVANT D'EFFECTUER L'ENTRETIEN PEUT ENTRAINER DES BLESSURES CORPORELLES SEVERES OU LA MORT.

⚠CAUTION
USE COPPER CONDUCTORS ONLY!
UNIT TERMINALS ARE NOT DESIGNED TO ACCEPT OTHER TYPES OF CONDUCTORS.
FAILURE TO DO SO MAY CAUSE DAMAGE TO THE EQUIPMENT.

THIS DRAWING IS PROPRIETARY AND SHALL NOT BE COPIED OR ITS CONTENTS DISCLOSED TO OUTSIDE PARTIES WITHOUT THE WRITTEN CONSENT OF THE TRANE COMPANY