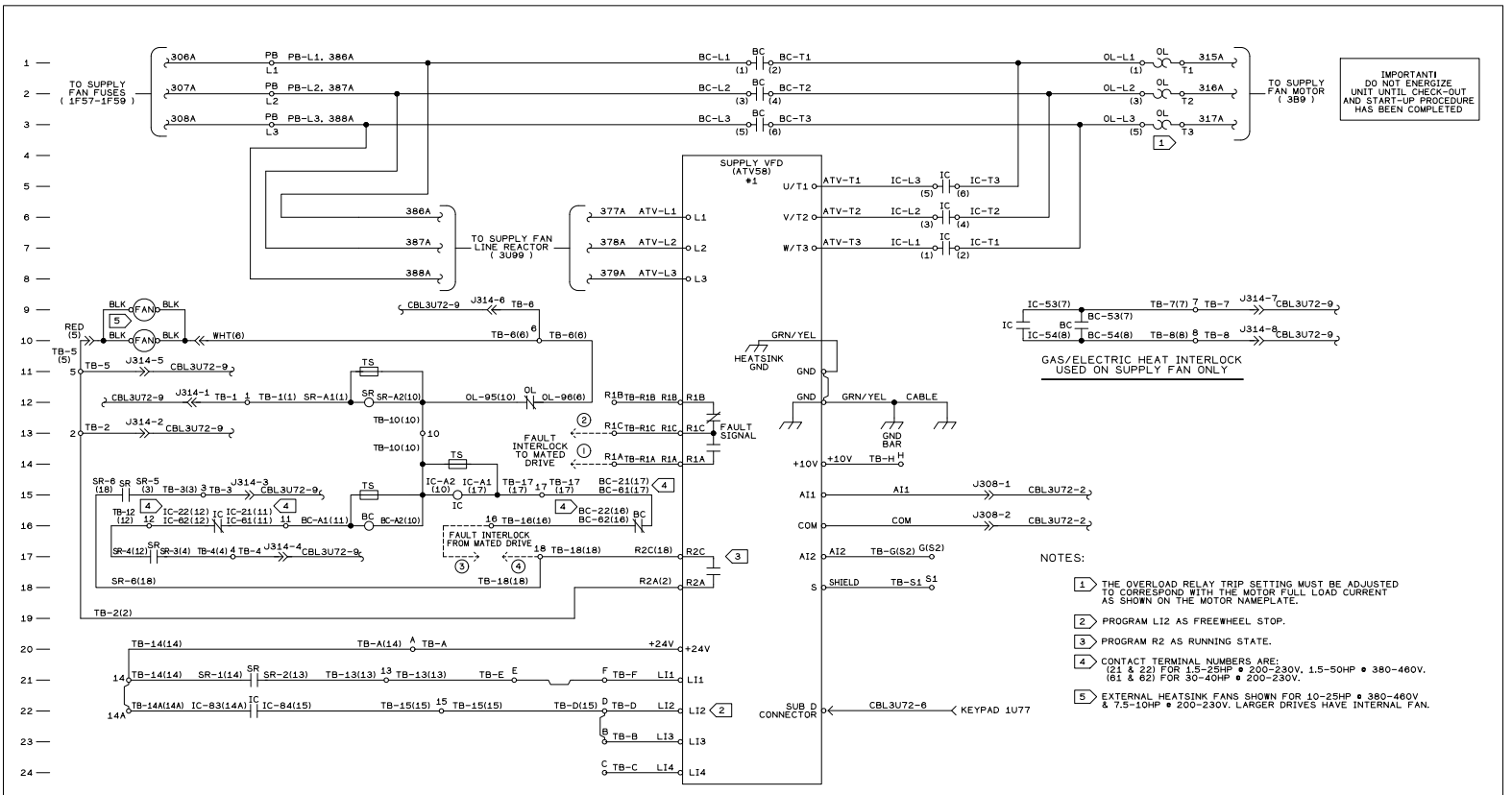

3U72 SUPPLY VFD ASSEMBLY#1

ABBREVIATIONS	
BC	BYPASS CONTACTOR
FAN	HEATSINK FAN
IC	ISOLATION CONTACTOR
OL	OVERLOAD
PB	POWER BLOCK
SR	START RELAY
TB	TERMINAL BLOCK
TS	TRANSIENT SUPPRESSOR
VFD	VARIABLE FREQUENCY DRIVE

DEVICE PREFIX LOCATION CODE	
AREA	LOCATION
1	INSIDE UNIT CONTROL BOX
2	CONDENSER SECTION
3	AIR HANDLER SECTION
4	HEATING SECTION
5	EXTERNAL FIELD MOUNTED DEVICE

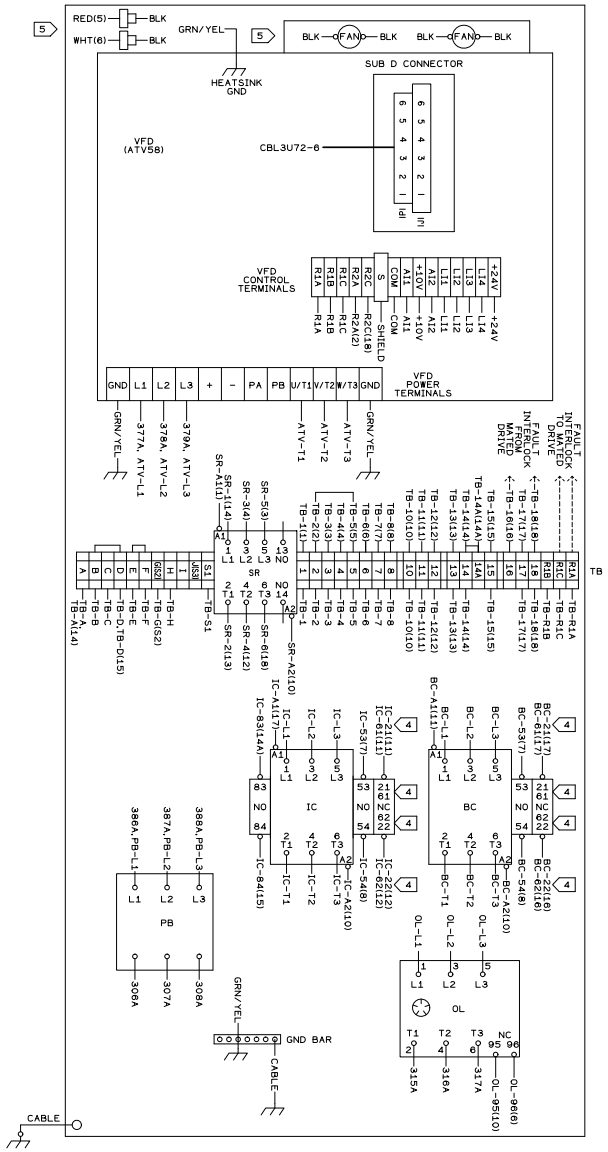

⚠ WARNING

HAZARDOUS VOLTAGE!

DISCONNECT ALL ELECTRIC POWER INCLUDING REMOTE DISCONNECTS BEFORE SERVICING.

FAILURE TO DISCONNECT POWER BEFORE SERVICING CAN CAUSE SEVERE PERSONAL INJURY OR DEATH.

⚠ AVERTISSEMENT

VOLTAGE HASARDEUX!

DECONNECTEZ TOUTES LES SOURCES ELECTRIQUES INCLUANT LES DISJONCTEURS SITUES A DISTANCE AVANT D'EFFECTUER L'ENTRETIEN.

FAUTE DE DECONNECTER LA SOURCE ELECTRIQUE AVANT D'EFFECTUER L'ENTRETIEN PEUT ENTRAINER DES BLESSURES CORPORELLES SEVERES OU LA MORT.

⚠ CAUTION

USE COPPER CONDUCTORS ONLY!

UNIT TERMINALS ARE NOT DESIGNED TO ACCEPT OTHER TYPES OF CONDUCTORS.

FAILURE TO DO SO MAY CAUSE DAMAGE TO THE EQUIPMENT.

10 X 15 METAL PLATE

REPLACES:

REVISION DATE:

DRAWN BY: T. DEPRIEST

DATE: 03/01/00

2307-4588

THE TRANE COMPANY

THIS DRAWING IS PROPRIETARY TO THE TRANE COMPANY AND AMERICAN STANDARD INC. UNPUBLISHED - ALL RIGHTS RESERVED UNDER THE COPYRIGHT LAWS OF THE UNITED STATES

SIMILAR TO: 2307-4330

FILE NUMBER:

ROOFTOP PACKAGED AIR CONDITIONER

SCHEMATIC & CONNECTION WIRING DIAGRAM SUPPLY FAN (VARIABLE FREQUENCY DRIVE WITH BYPASS) 90-130 TON S_HG (3U72 #1 DRIVE) LINE REACTOR

DRAWING NUMBER: 2307-4580

REV: A