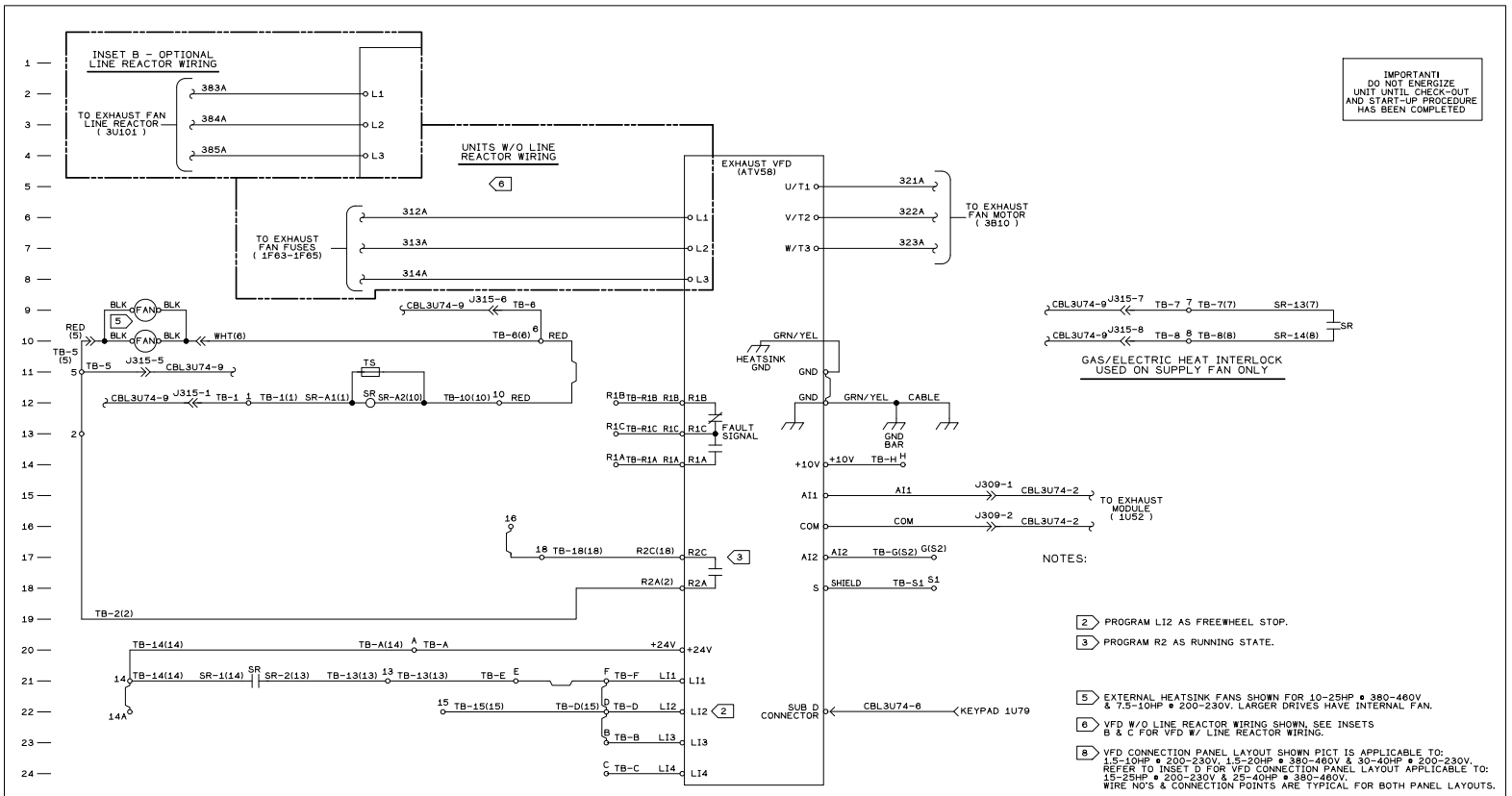


## 8 3U74 EXHAUST VFD ASSEMBLY

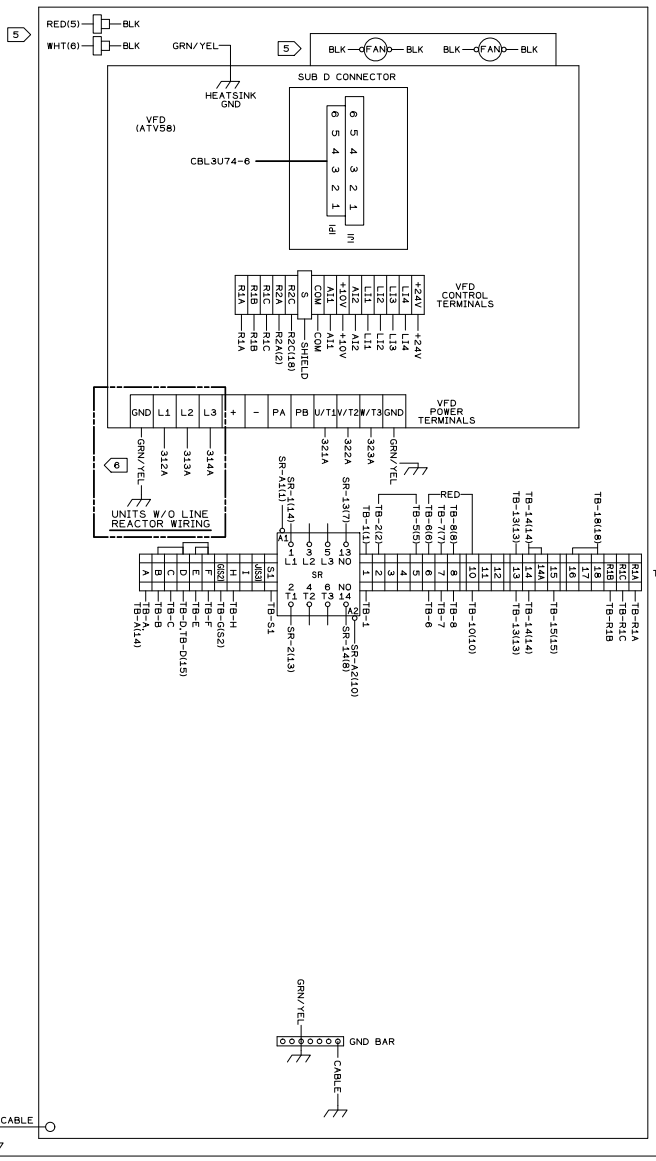


| ABBREVIATIONS | |
|---|---|
| FAN | HEATSINK FAN |
| SR | START RELAY |
| TB | TERMINAL BLOCK |
| TS | TRANSIENT SUPPRESSOR |
| VFD | VARIABLE FREQUENCY DRIVE |

| DEVICE PREFIX LOCATION CODE | |
|---|---|
| AREA | LOCATION |
| 1 | INSIDE UNIT CONTROL BOX |
| 2 | CONDENSER SECTION |
| 3 | AIR HANDLER SECTION |
| 4 | HEATING SECTION |
| 5 | EXTERNAL FIELD MOUNTED DEVICE |

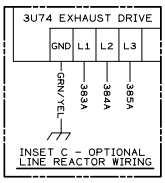


### ⚠ WARNING

HAZARDOUS VOLTAGE!

DISCONNECT ALL ELECTRIC POWER INCLUDING REMOTE DISCONNECTS BEFORE SERVICING.

FAILURE TO DISCONNECT POWER BEFORE SERVICING CAN CAUSE SEVERE PERSONAL INJURY OR DEATH.

### ⚠ AVERTISSEMENT

VOLTAGE HASARDEUX!

DECONNECTEZ TOUTES LES SOURCES ELECTRIQUES INCLUANT LES DISJONCTEURS SITUES A DISTANCE AVANT D'EFFECTUER L'ENTRETIEN.

FAUTE DE DECONNECTER LA SOURCE ELECTRIQUE AVANT D'EFFECTUER L'ENTRETIEN PEUT ENTRAINER DES BLESSURES CORPORELLES SEVERES OU LA MORT.

### ⚠ CAUTION

USE COPPER CONDUCTORS ONLY!

UNIT TERMINALS ARE NOT DESIGNED TO ACCEPT OTHER TYPES OF CONDUCTORS.

FAILURE TO DO SO MAY CAUSE DAMAGE TO THE EQUIPMENT.

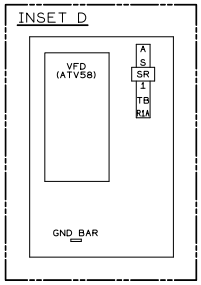


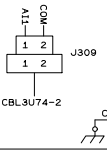


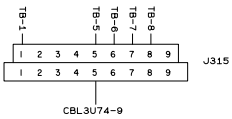


10 X 15 METAL PLATE

| | |
|---|---|
| REPLACES: | 2307-4588 |
| REVISION DATE: | THE TRANE COMPANY |
| DRAWN BY: T. DEPRIEST | DRAWN TO AMERICAN STANDARD INC. |
| DATE: 03/01/00 | THIS DRAWING IS PROPRIETARY TO AMERICAN STANDARD INC. |
| SIMILAR TO: 2307-4317 | |

FILE NUMBER:

ROOFTOP PACKAGED AIR CONDITIONER
SCHEMATIC & CONNECTION WIRING DIAGRAM
EXHAUST FAN/VARIABLE FREQUENCY DRIVE
20 - 130 TON S_HF S_HG
( 3U74 )

DRAWING NUMBER: 2307-4575

REV: A