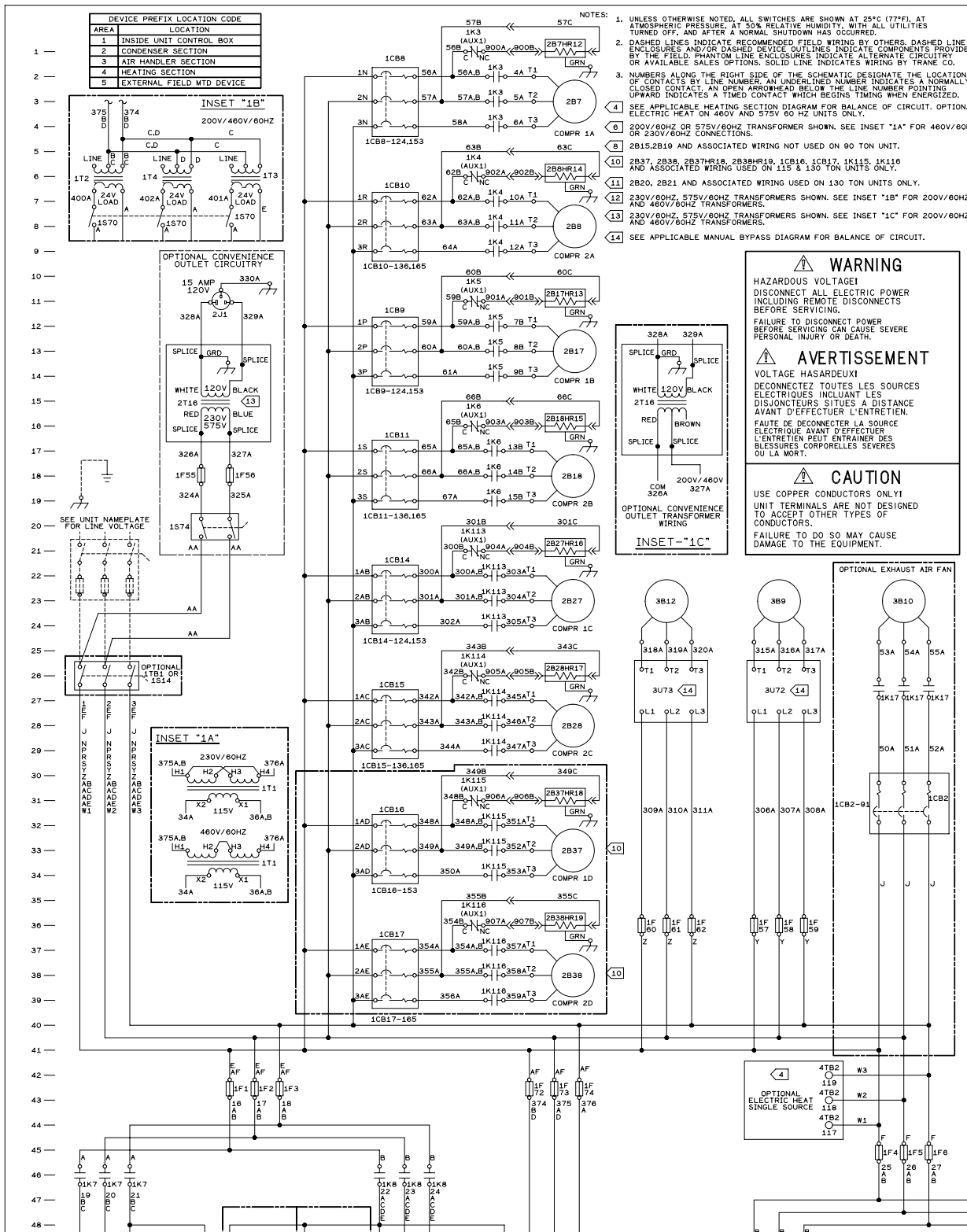

NOTES:

1. UNLESS OTHERWISE NOTED, ALL SWITCHES ARE SHOWN AT 25°C (77°F), AT ATMOSPHERIC PRESSURE, AT 50% RELATIVE HUMIDITY, WITH ALL UTILITIES TURNED OFF, AND AFTER A NORMAL SHUTDOWN HAS OCCURRED.
2. DASHED LINES INDICATE RECOMMENDED FIELD WIRING BY OTHERS. DASHED LINE ENCLOSURES AND/OR DASHED DEVICE OUTLINES INDICATE COMPONENTS PROVIDED BY THE FIELD. PHANTOM LINE ENCLOSURES INDICATE ALTERNATE CIRCUITRY OR AVAILABLE SALES OPTIONS. SOLID LINE INDICATES WIRING BY TRANE CO.
3. NUMBERS ALONG THE RIGHT SIDE OF THE SCHEMATIC DESIGNATE THE LOCATION OF CONTACTS BY LINE NUMBER. AN UNDERLINED NUMBER INDICATES A NORMALLY CLOSED CONTACT. AN OPEN ARROWHEAD BELOW THE LINE NUMBER POINTING UPWARD INDICATES A TIMED CONTACT WHICH BEGINS TIMING WHEN ENERGIZED.

4 SEE APPLICABLE HEATING SECTION DIAGRAM FOR BALANCE OF CIRCUIT. OPTIONAL ELECTRIC HEAT ON 460V AND 575V 60 HZ UNITS ONLY.

6 200V/60HZ OR 575V/60HZ TRANSFORMER SHOWN. SEE INSET "1A" FOR 460V/60HZ OR 230V/60HZ CONNECTIONS.

8 2B15,2B19 AND ASSOCIATED WIRING NOT USED ON 90 TON UNIT.

10 2B37, 2B38, 2B37HR18, 2B38HR19, 1CB16, 1CB17, 1K115, 1K116 AND ASSOCIATED WIRING USED ON 115 & 130 TON UNITS ONLY.

11 2B20, 2B21 AND ASSOCIATED WIRING USED ON 130 TON UNITS ONLY.

12 230V/60HZ, 575V/60HZ TRANSFORMERS SHOWN. SEE INSET "1B" FOR 200V/60HZ AND 460V/60HZ TRANSFORMERS.

13 230V/60HZ, 575V/60HZ TRANSFORMERS SHOWN. SEE INSET "1C" FOR 200V/60HZ AND 460V/60HZ TRANSFORMERS.

14 SEE APPLICABLE MANUAL BYPASS DIAGRAM FOR BALANCE OF CIRCUIT.

⚠ WARNING

HAZARDOUS VOLTAGE!

DISCONNECT ALL ELECTRIC POWER INCLUDING REMOTE DISCONNECTS BEFORE SERVICING.

FAILURE TO DISCONNECT POWER BEFORE SERVICING CAN CAUSE SEVERE PERSONAL INJURY OR DEATH.

⚠ AVERTISSEMENT

VOLTAGE HASARDEUX!

DECONNECTEZ TOUTES LES SOURCES ELECTRIQUES INCLUANT LES DISJONCTEURS SITUES A DISTANCE AVANT D'EFFECTUER L'ENTRETIEN.

FAUTE DE DECONNECTER LA SOURCE ELECTRIQUE AVANT D'EFFECTUER L'ENTRETIEN PEUT ENTRAINER DES BLESSURES CORPORELLES SEVERES OU LA MORT.

⚠ CAUTION

USE COPPER CONDUCTORS ONLY!

UNIT TERMINALS ARE NOT DESIGNED TO ACCEPT OTHER TYPES OF CONDUCTORS.

FAILURE TO DO SO MAY CAUSE DAMAGE TO THE EQUIPMENT.

DEVICE PREFIX LOCATION CODE

AREA	LOCATION
1	INSIDE UNIT CONTROL BOX
2	CONDENSER SECTION
3	AIR HANDLER SECTION
4	HEATING SECTION
5	EXTERNAL FIELD MTD DEVICE

LEGEND

DEVICE DESIGNATION	DESCRIPTION	LINE NUMBER
1CB2	EXHAUST FAN BREAKER	31
1CB8 - 1CB11	COMPR CIRCUIT BREAKER	2,12,7,17
1CB14 - 1CB17	COMPR CIRCUIT BREAKER	22,27,32,37
1F1 - 1F6	CONDENSER FAN FUSE	43,45
1F7	CONTROL CIRCUIT FUSE	58
1F44,1F45	COMPR PROTECTOR FUSE	126,138,155,167
1F55,1F56	CONVENIENCE OUTLET FUSE	18
1F57 - 1F62	SUPPLY V.F.DRIVE FUSE	36
1F72 - 1F74	TRANSFORMER CIRCUIT FUSE	43
1K3,1K4	COMPRESSOR CONTACTOR	127,139,156,168
1K5,1K6	COMPRESSOR CONTACTOR	128,140,157,169
1K7,1K8	CONDENSER FAN CONTACTOR	129,131,158,160
1K9,1K10	CONDENSER FAN CONTACTOR	141,143,170,172
1K17	EXHAUST FAN CONTACTOR	91
1K113,1K114	COMPRESSOR CONTACTOR	123,135,152,164
1K115,1K116	COMPRESSOR CONTACTOR	151,163
1S1	CONTROL CIRCUIT SWITCH	58
1S14	MANUAL DISCONNECT SWITCH	26
1S70	24 VOLT TRANSFORMER SW	57
1S72	SPLY V.F.D. BYPASS SWITCH	99,108
1S74	CONV. OUTLET SWITCH	20
1T1	CONTROL POWER TRANSFORMER	55
1T2,1T3,1T4	24 VOLT TRANSFORMER	56
1TB1	POWER TERMINAL BLOCK	26
1TB4,5,16,17	CONT TERM BLOCK (CUSTOMER)	
1TB6 - 1TB10	CONT TERM BLOCK (FACTORY)	
1U48	ROOFTOP MODULE	61
1U49	COMPRESSOR MODULE	121,150
1U50	HEAT MODULE	182,196,210
1U51	GENERIC B.A.S. MODULE	223
1U52	EXH/COMP ENTHALPY MODULE	242
1U53	VENTILATION OVERRIDE MOD	258
1U54	BAS/NETWORK COMM MODULE	272
1U55	INTERPRO COMM BRIDGE MOD	279
1U65	HUMAN INTERFACE MODULE	286
1U77	SPLY VFD REMOTE KEYPAD #1	95
1U78	SPLY VFD REMOTE KEYPAD #2	103
2B1 - 2B6	CONDENSER FAN MOTOR	53,56
2B7,8,17,18	COMPRESSOR	3,8,13,18
2B27,28,37,38	COMPRESSOR	23,28,33,38
2B7HR12-2B18HR15	COMPR CRANKCASE HEATER	1,11,6,16
2B27HR16-2B38HR19	COMPR CRANKCASE HEATER	21,26,31,36
2B7S1,2B8S3	COMPR WINDING T-STAT	125,137,154,166
2B17S2,2B18S4	COMPR WINDING T-STAT	124,136,153,165
2B27S5,2B28S6	COMPR WINDING T-STAT	124,136,153,165
2B37S7,2B38S8	COMPR WINDING T-STAT	154,166
2B13,2B14,2B15	CONDENSER FAN MOTOR	53,56
2B19,2B20,2B21	CONDENSER FAN MOTOR	53,56
2J1	CONVENIENCE OUTLET	11
2RT1,2RT2	SAT COND TEMP SENSOR	127,156,139,168
2S2,2S3	HIGH PRESS CUTOUT	126,138,155,167
2S4,2S5	LOW PRESS CUTOUT	125,137,154,166
2T16	CONV. OUTLET TRANSFORMER	15
3B9,3B12	SUPPLY FAN MOTOR	23
3B10	EXHAUST FAN MOTOR	23
3L21	SPACE PRESS CALIBRATED SOL	253
3RT3	OUTDOOR AIR TEMP SENSOR	101
3RT6	RETURN AIR TEMP SENSOR	251
3RT9	SUPPLY AIR TEMP SENSOR	90
3RT14,3RT15	EVAPORATOR TEMP SENSOR	123,135,152,164
3S16	R/A HIGH DUCT TEMP T-STAT	106
3S17	S/A HIGH DUCT TEMP T-STAT	106
3S21	FILTER SWITCH	117
3S68	SPLY AIRFLOW PROVING SW	113
3S69	EXH AIRFLOW PROVING SW	115
3U12	100% EXHAUST ACTUATOR	250
3U13	ECONOMIZER ACTUATOR	82
3U60	S/A DUCT PRESS TRANSDUCER	95
3U62	SPACE PRESS TRANSDUCER	249
3U63	O/A HUMIDITY SENSOR	104
3U64	R/A HUMIDITY SENSOR	254
3U72	SUPPLY V.F. DRIVE #1	27,95 182,196
3U73	SUPPLY V.F. DRIVE #2	27,103
4S12	FREEZESTAT	218
4TB2,4TB3	TERM BLOCK-ELEC HT SECT	
4TB14	TERM BLOCK-GAS HT SECT	
4U15	HYDRONIC HEAT ACTUATOR	212
5K86	OCCUPIED/UNOCCUPIED RELAY	112
5K87	VAV CHANGEOVER RELAY	119
5K89	DEMAND LIMIT RELAY	231
5K90,5K91	VENT OVERRIDE MODE RELAY	260,262
5K92,5K93,5K94	VENT OVERRIDE MODE RELAY	264,266,268
5RT16	MORNING WARM-UP TEMP SENSOR	187,201,215
5S67	EXTERNAL AUTO STOP SWITCH	109
5S71	EMERGENCY STOP	106
5U56	CV REMOTE PANEL	81
5U57	REMOTE ZONE TEMP SENSOR	67
5U58	CV/VAV REM PNL W/ NSB	89
5U59	VAV REMOTE PANEL	79
5U61	VAV ZONE RESET TEMP SENSOR	99
5U66	REMOTE HUMAN INTERFACE MOD	291
5U68	CV ZONE PANEL	76
5U69	REMOTE ZONE TEMP SENSOR	86
5U70	REMOTE MIN POSITION POT	120

10 X 15 METAL PLATE

REPLACES:

DATE: 08/25/99

DRAWN BY: T.DEPRIEST

REVISION DATE:

SIM.TO: 2307-4339

THE TRANE COMPANY

2307-4348

FILE NUMBER:

ROOFTOP PACKAGED AIR CONDITIONER
SCHEMATIC WIRING DIAGRAM
POWER WIRES
W/ SUPPLY FAN VARIABLE FREQUENCY DRIVE
60 - 130 TON SING

DRAWING NUMBER: 2307-4515

SHT 1 OF 5

REV B