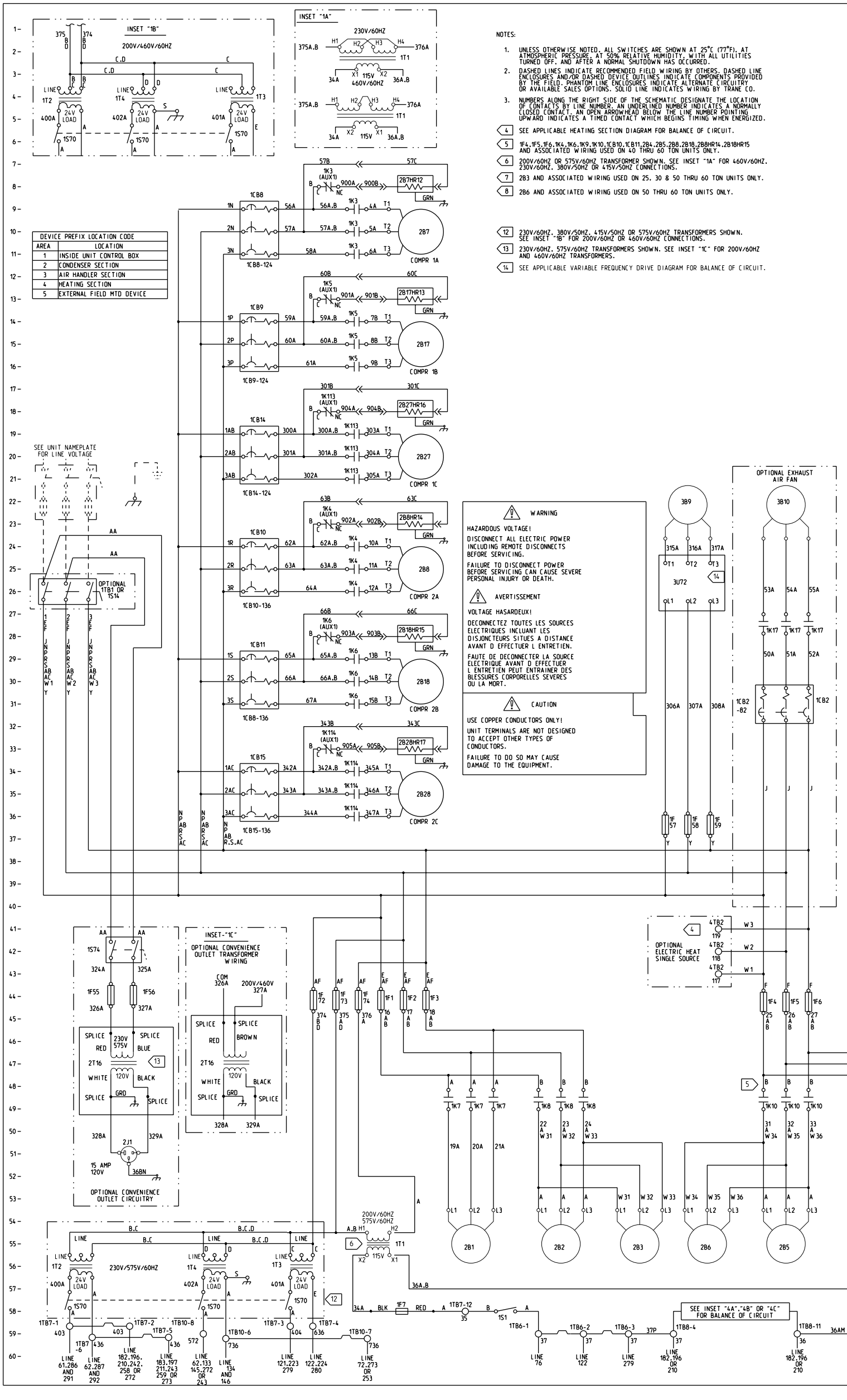


| DEVICE PREFIX LOCATION CODE | |
|---|---|
| AREA | LOCATION |
| 1 | INSIDE UNIT CONTROL BOX |
| 2 | CONDENSER SECTION |
| 3 | AIR HANDLER SECTION |
| 4 | HEATING SECTION |
| 5 | EXTERNAL FIELD MTD DEVICE |

NOTES:

1. UNLESS OTHERWISE NOTED, ALL SWITCHES ARE SHOWN AT 25°C (77°F), AT ATMOSPHERIC PRESSURE, AT 50% RELATIVE HUMIDITY, WITH ALL UTILITIES TURNED OFF, AND AFTER A NORMAL SHUTDOWN HAS OCCURRED.
2. DASHED LINES INDICATE RECOMMENDED FIELD WIRING BY OTHERS. DASHED LINE ENCLOSURES AND/OR DASHED DEVICE OUTLINES INDICATE COMPONENTS PROVIDED BY THE FIELD. PHANTOM LINE ENCLOSURES INDICATE ALTERNATE CIRCUITRY OR AVAILABLE SALES OPTIONS. SOLID LINE INDICATES WIRING BY TRANE CO.
3. NUMBERS ALONG THE RIGHT SIDE OF THE SCHEMATIC DESIGNATE THE LOCATION OF CONTACTS BY LINE NUMBER. AN UNDERLINED NUMBER INDICATES A NORMALLY CLOSED CONTACT. AN OPEN ARROWHEAD BELOW THE LINE NUMBER POINTING UPWARD INDICATES A TIMED CONTACT WHICH BEGINS TIMING WHEN ENERGIZED.

4 SEE APPLICABLE HEATING SECTION DIAGRAM FOR BALANCE OF CIRCUIT.

5 1F4,1F5,1F6,1K4,1K6,1K9,1K10,1CB10,1CB11,2B4,2B5,2B8,2B18,2B8HR14,2B18HR15 AND ASSOCIATED WIRING USED ON 40 THRU 60 TON UNITS ONLY.

6 200V/60HZ OR 575V/60HZ TRANSFORMER SHOWN. SEE INSET "1A" FOR 460V/60HZ, 230V/60HZ, 380V/50HZ OR 415V/50HZ CONNECTIONS.

7 2B3 AND ASSOCIATED WIRING USED ON 25, 30 & 50 THRU 60 TON UNITS ONLY.

8 2B6 AND ASSOCIATED WIRING USED ON 50 THRU 60 TON UNITS ONLY.

12 230V/60HZ, 380V/50HZ, 415V/50HZ OR 575V/60HZ TRANSFORMERS SHOWN. SEE INSET "1B" FOR 200V/60HZ OR 460V/60HZ CONNECTIONS.

13 230V/60HZ, 575V/60HZ TRANSFORMERS SHOWN. SEE INSET "1C" FOR 200V/60HZ AND 460V/60HZ TRANSFORMERS.

14 SEE APPLICABLE VARIABLE FREQUENCY DRIVE DIAGRAM FOR BALANCE OF CIRCUIT.

| LEGEND | | |
|---|---|---|
| DEVICE DESIGNATION | DESCRIPTION | LINE NUMBER |
| | | |
| 1CB2 | EXHAUST FAN BREAKER | 31 |
| 1CB8 - 1CB11 | COMPR CIRCUIT BREAKER | 9.14.24.29 |
| 1CB14.1CB15 | COMPR CIRCUIT BREAKER | 19.34 |
| 1F1 - 1F6 | CONDENSER FAN FUSES | 44 |
| 1F7 | CONTROL CIRCUIT FUSE | 58 |
| 1F44.1F45 | COMPR PROTECTOR FUSE | 126.138 |
| 1F55.1F56 | CONVENIENCE OUTLET FUSE | 44 |
| 1F57 - 1F59 | SUPPLY V.F.DRIVE FUSE | 36 |
| | | |
| 1F72 - 1F74 | TRANSFORMER CIRCUIT FUSE | 44 |
| 1K3.1K4 | COMPRESSOR CONTACTOR | 127.139 |
| 1K5.1K6 | COMPRESSOR CONTACTOR | 128.140 |
| 1K7.1K8 | CONDENSER FAN CONTACTOR | 129.131 |
| 1K9.1K10 | CONDENSER FAN CONTACTOR | 141.143 |
| | | |
| 1K17 | EXHAUST FAN CONTACTOR | 82 |
| 1K113.1K114 | COMPRESSOR CONTACTOR | 123.135 |
| 1S1 | CONTROL CIRCUIT SWITCH | 58 |
| 1S14 | MANUAL DISCONNECT SWITCH | 26 |
| 1S70 | 24 VOLT TRANSFORMER SW | 57 |
| 1S72 | SPLY V.F.D. BYPASS SWITCH | 93 |
| | | |
| 1S74 | CONV. OUTLET SWITCH | 42 |
| 1T1 | CONTROL POWER TRANSFORMER | 55 |
| 1T2.1T3.1T4 | 24 VOLT TRANSFORMER | 56 |
| 1TB1 | POWER TERMINAL BLOCK | 26 |
| 1TB4.5.16.17 | CONT TERM BLOCK (CUSTOMER) | |
| 1TB6 - 1TB10 | CONT TERM BLOCK (FACTORY) | |
| 1U48 | ROOFTOP MODULE | 61 |
| 1U49 | COMPRESSOR MODULE | 121 |
| 1U50 | HEAT MODULE | 182.196.210 |
| 1U51 | GENERIC B.A.S. MODULE | 223 |
| 1U52 | EXH/COMP ENTHALPY MODULE | 242 |
| 1U53 | VENTILATION OVERRIDE MOD | 258 |
| 1U54.1U104 | BAS/NETWORK COMM MODULE | 272 |
| 1U55 | INTERPRO COMM BRIDGE MOD | 279 |
| 1U65 | HUMAN INTERFACE MODULE | 286 |
| 1U77 | SPLY V.F.D. REMOTE KEYPAD | 86 |
| | | |
| | | |
| 1U107 | MODULATING DEHUMID. MODULE | 279 |
| 2B1 - 2B6 | CONDENSER FAN MOTOR | 55 |
| 2B7.8.17.18 | COMPRESSOR | 10.25.15.30 |
| 2B27.2B28 | COMPRESSOR | 20.35 |
| 2B7HR12-2B17HR13 | COMPR CRANKCASE HEATER | 8.13 |
| 2B8HR14-2B18HR15 | COMPR CRANKCASE HEATER | 23.28 |
| 2B27HR16-2B28HR17 | COMPR CRANKCASE HEATER | 18.33 |
| 2B7S1.2B8S3 | COMPR WINDING T-STAT | 125.137 |
| 2B17S2.2B18S4 | COMPR WINDING T-STAT | 124.136 |
| 2B27S5.2B28S6 | COMPR WINDING T-STAT | 124.136 |
| 2J1 | CONVENIENCE OUTLET | 51 |
| 2L25 | MODULATING REHEAT VALVE | 283 |
| 2L26 | MODULATING CONDENSER VALVE | 289 |
| 2RT1.2RT2 | SAT COND TEMP SENSOR | 127.139 |
| 2S2.2S3 | HIGH PRESS CUTOUT | 126.138 |
| 2S4.2S5 | LOW PRESS CUTOUT | 125.137 |
| 2T16 | CONV. OUTLET TRANSFORMER | 47 |
| 2U84 | LOW AMBIENT DAMPER ACT #1 | 134 |
| 2U85 | LOW AMBIENT DAMPER ACT #2 | 146 |
| 3B9 | SUPPLY FAN MOTOR | 22 |
| 3B10 | EXHAUST FAN MOTOR | 22 |
| 3L21 | SPACE PRESS CALIBRATED SOL | 248 |
| | | |
| 3RT3 | OUTDOOR AIR TEMP SENSOR | 100 |
| 3RT6 | RETURN AIR TEMP SENSOR | 251 |
| 3RT9 | SUPPLY AIR TEMP SENSOR | 91 |
| 3RT14.3RT15 | LEAVING EVAP TEMP SENSOR | 123.135 |
| 3RT28.3RT29 | ENTERING EVAP TEMP SENSOR | 131.143 |
| 3S16 | R/A HIGH DUCT TEMP T-STAT | 106 |
| 3S17 | S/A HIGH DUCT TEMP T-STAT | 106 |
| 3S21 | FILTER SWITCH | 117 |
| 3S68 | SPLY AIRFLOW PROVING SW | 113 |
| 3S69 | EXH AIRFLOW PROVING SW | 115 |
| 3U12 | EXHAUST ACTUATOR | 253 |
| 3U13 | ECONOMIZER ACTUATOR | 72 |
| | | |
| 3U60 | S/A DUCT PRESS TRANSDUCER | 95 |
| 3U62 | SPACE PRESS TRANSDUCER | 249 |
| 3U63 | O/A HUMIDITY SENSOR | 104 |
| 3U64 | R/A HUMIDITY SENSOR | 254 |
| 3U72 | SUPPLY VAR. FREQ. DRIVE | 26.89.182.196 |
| | | |
| | | |
| 4S12 | FREEZESTAT | 218 |
| 4TB2.4TB3 | TERM BLOCK-ELEC HT SECT | |
| 4TB14 | TERM BLOCK-GAS HT SECT | |
| 4U15 | HYDRONIC HEAT ACTUATOR | 212 |
| 5K86 | OCCUPIED/UNOCCUPIED RELAY | 112 |
| 5K87 | VAV CHANGEOVER RELAY | 119 |
| 5K89 | DEMAND LIMIT RELAY | 231 |
| 5K90.5K91 | VENT OVERRIDE MODE RELAY | 260.262 |
| 5K92.5K93.5K94 | VENT OVERRIDE MODE RELAY | 264.266.268 |
| 5RT16 | MORNING WARM-UP TEMP SENSOR | 187.201.215 |
| 5S67 | EXTERNAL AUTO STOP SWITCH | 109 |
| 5S71 | EMERGENCY STOP | 106 |
| 5U56 | CV REMOTE PANEL | 81 |
| 5U57 | REMOTE ZONE TEMP SENSOR | 67 |
| 5U58 | CV/VAV REM PNL W/ NSB | 89 |
| 5U59 | VAV REMOTE PANEL | 79 |
| 5U61 | VAV ZONE RESET TEMP SENSOR | 98 |
| 5U66 | REMOTE HUMAN INTERFACE MOD | 291 |
| 5U68 | CV ZONE PANEL | 76 |
| 5U69 | REMOTE ZONE TEMP SENSOR | 89 |
| 5U70 | REMOTE MIN POSITION POT | 120 |

THIS DRAWING IS PROPRIETARY AND SHALL NOT BE COPIED OR ITS CONTENTS DISCLOSED TO OUTSIDE PARTIES WITHOUT THE CONSENT OF TRANE.

TRANE

DRAWN BY: T. DEPRIEST
TRANE® DATE: 08/24/99
REPLACES: -
REVISION DATE: 10-Mar-08
CAD SYSTEM USED: -
SIMILAR TO: 2307-3971

FILE NUMBER: 2307-4337

ROOFTOP PACKAGED AIR CONDITIONER
SCHEMATIC WIRING DIAGRAM
ROOFTOP UCM
POWER WIRES
70 & 75 TON S_HF
W/ SUPPLY FAN VARIABLE FREQUENCY DRIVE

DRAWING NUMBER: 2307-4505
SHEET: 1 OF 5
REV: C