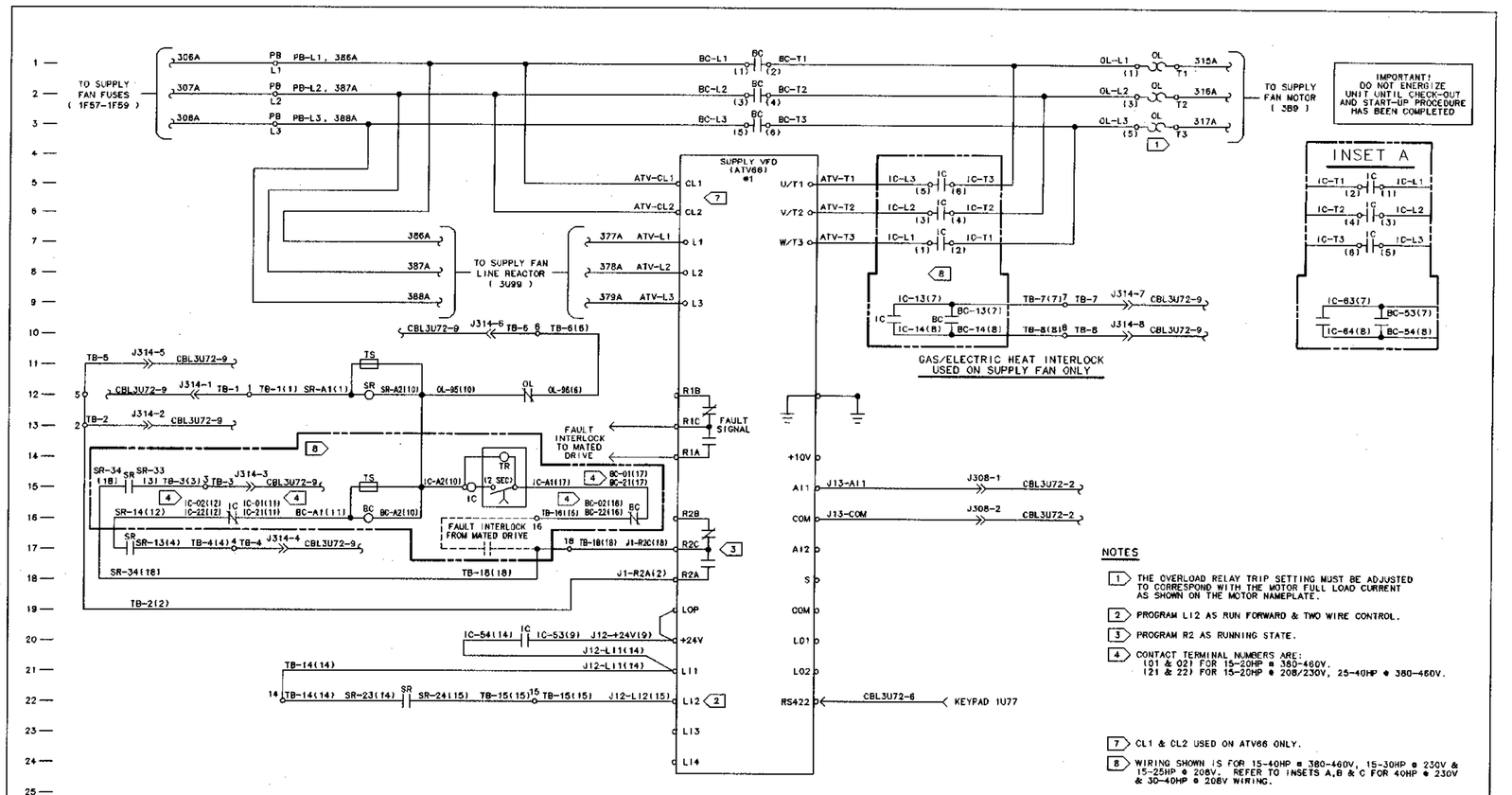

NOTES

1. THE OVERLOAD RELAY TRIP SETTING MUST BE ADJUSTED TO CORRESPOND WITH THE MOTOR FULL LOAD CURRENT AS SHOWN ON THE MOTOR NAMEPLATE.
2. PROGRAM L12 AS RUN FORWARD & TWO WIRE CONTROL.
3. PROGRAM R2 AS RUNNING STATE.
4. CONTACT TERMINAL NUMBERS ARE:
   (01 & 02) FOR 15-20HP @ 380-460V.
   (21 & 22) FOR 15-20HP @ 208/230V, 25-40HP @ 380-460V.
7. CL1 & CL2 USED ON ATV66 ONLY.
8. WIRING SHOWN IS FOR 15-40HP @ 380-460V, 15-30HP @ 230V & 15-25HP @ 208V. REFER TO INSETS A,B & C FOR 40HP @ 230V & 30-40HP @ 208V WIRING.

DEVICE PREFIX LOCATION CODE	
AREA	LOCATION
1	INSIDE UNIT CONTROL BOX
2	CONDENSER SECTION
3	AIR HANDLER SECTION
4	HEATING SECTION
5	EXTERNAL FIELD MOUNTED DEVICE

ABBREVIATIONS	
BC	BYPASS CONTACTOR
IC	ISOLATION CONTACTOR
ICR	ISOLATION CONTACTOR RELAY
OL	OVERLOAD
PB	POWER BLOCK
SR	START RELAY
TB	TERMINAL BLOCK
TR	TIME DELAY RELAY
TS	TRANSIENT SUPPRESSOR
VFD	VARIABLE FREQUENCY DRIVE

⚠ WARNING

HAZARDOUS VOLTAGE!
DISCONNECT ALL ELECTRIC POWER INCLUDING REMOTE DISCONNECTS BEFORE SERVICING.
FAILURE TO DISCONNECT POWER BEFORE SERVICING CAN CAUSE SEVERE PERSONAL INJURY OR DEATH.

⚠ AVERTISSEMENT

VOLTAGE HASARDEUX!
DECONNECTEZ TOUTES LES SOURCES ELECTRIQUES INCLUANT LES DISJONCTEURS SITUES A DISTANCE AVANT D'EFFECTUER L'ENTRETIEN.
FAUTE DE DECONNECTER LA SOURCE ELECTRIQUE AVANT D'EFFECTUER L'ENTRETIEN PEUT ENTRAINER DES BLESSURES CORPORELLES SEVERES OU LA MORT.

⚠ CAUTION

USE COPPER CONDUCTORS ONLY!
UNIT TERMINALS ARE NOT DESIGNED TO ACCEPT OTHER TYPES OF CONDUCTORS.
FAILURE TO DO SO MAY CAUSE DAMAGE TO THE EQUIPMENT.

3U72 SUPPLY VFD ASSEMBLY #1

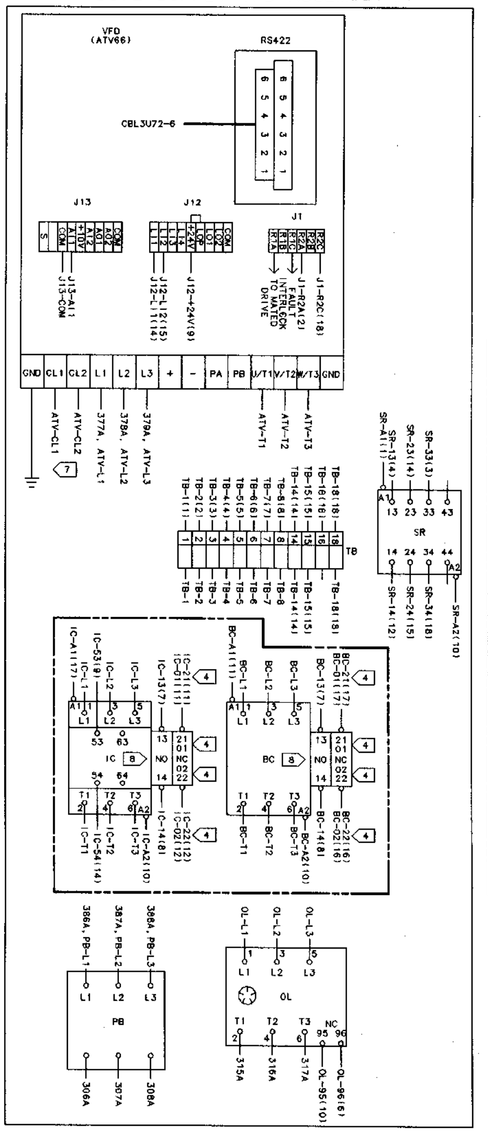

10 X 15 METAL PROOF

REPLACES:	
REVISION DATE:	
DRAWN BY: B. SMALLING	
DATE: 11/5/97	
2307-4326	
THE TRANE COMPANY A DIVISION OF AMERICAN STANDARD INC.	
STATEMENT TO 2307 3833	
FILE NUMBER:	
DRAWING NUMBER: 2307-4330	
REV: A	

ROOFTOP PACKAGED AIR CONDITIONER
SCHEMATIC & CONNECTION WIRING DIAGRAM
SINGLE ZONE VAV WITH VARIABLE FREQUENCY DRIVE WITH BYPASS CONTROL WITH LINE REACTOR
90 - 130 TON S-MG
(3U72 #1 DRIVE)