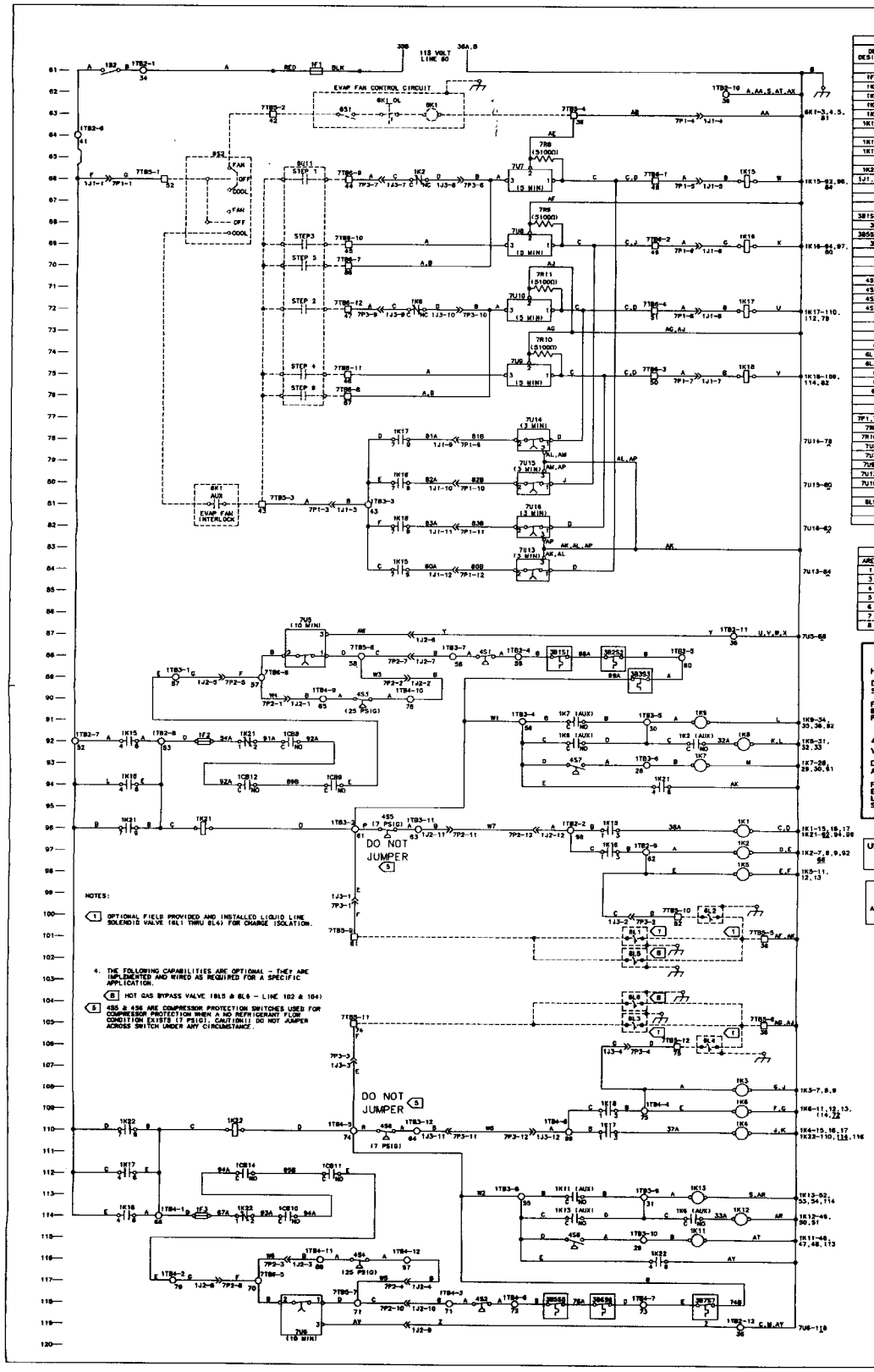

LEGEND		
DEVICE DESIGNATION	DESCRIPTION	LINE NUMBER
1F1	CONTROL CIRCUIT FUSE	81
1F2, 1F3	COMPR PROTECTION FUSE	92,114
1K1, 1K2	COMPRESSOR CONTACTOR	96,97
1K3, 1K4	COMPRESSOR CONTACTOR	108,110
1K5, 1K6	COMPRESSOR CONTACTOR	98,109
1K7-1K9	CONDENSER FAN CONTACTOR	91,92,93
1K11-1K13	CONDENSER FAN CONTACTOR	113,114,115
1K15, 1K16	COOLING RELAY	66,68
1K17, 1K18	COOLING RELAY	71,73
1K21, 1K22	RESET RELAY	96,110
1J1,1J2,1J3	PLUG CONNECTOR	
1S2	CONTROL CIRCUIT SWITCH	61
3B151, 3B252	COMPR WINDING THERMOSTAT	88,89
3B353	COMPR WINDING THERMOSTAT	89
3B565, 3B696	COMPR WINDING THERMOSTAT	116,118
3B757	COMPR WINDING THERMOSTAT	118
4S1,4S2	HIGH PRESSURE CUTOUT	96,116
4S3,4S4	LOW PRESSURE CUTOUT	90,116
4S5,4S6	COMPR PROTECTION SWITCH	96,110
4S7,4S8	FAN PRESSURE CONTROL	93,115
6K1	EVAP FAN STARTER	63
6L1,6L2	LIQUID LINE SOLENOID	100,101
6L3,6L4	LIQUID LINE SOLENOID	109,108
6S1	EVAP FAN CONTROL SWITCH	63
6S3	SYSTEM CONTROL SWITCH	65
6U11	6 STEP CONTROLLER	66
7P1,7P2,7P3	PLUG CONNECTOR	
7R8,7R9	LOAD RESISTOR	65,68
7R10,7R11	LOAD RESISTOR	71,74
7U5,7U6	LOW PRESSURE TIMER	87,116
7U7,7U8	COMPR FIXED OFF TIMER	66,69
7U9,7U10	COMPR FIXED OFF TIMER	70,72
7U13,7U14	COMPR FIXED ON TIMER	64,78
7U15,7U16	COMPR FIXED ON TIMER	80,82
8L5,8L6	HOT GAS BYPASS	102,104

DEVICE PREFIX LOCATION CODE	
AREA	LOCATION
1	CONTROL PANEL
3	COMPRESSOR
4	EXTERNAL MOUNTED COMPONENTS
5	EXTERNAL MOUNTED COMPONENTS
6	CUSTOMER PROVIDED DEVICE
7	OPTIONAL CONTROL PLATE
8	FIELD INSTALLED DEVICE

⚠ WARNING

HAZARDOUS VOLTAGE!

DISCONNECT POWER BEFORE SERVICING.

FAILURE TO DISCONNECT POWER BEFORE SERVICING CAN CAUSE SEVERE PERSONAL INJURY OR DEATH.

⚠ AVERTISSEMENT

VOLTAGE HASARDEUX!

DECONNECTEZ LA SOURCE ELECTRIQUE AVANT D'EFFECTUER L'ENTRETIEN.

FAUTE DE DECONNECTER LA SOURCE ELECTRIQUE AVANT D'EFFECTUER L'ENTRAINER DES BLESSURES CORPORELLES SEVERES OU LA MORT.

USE COPPER CONDUCTORS ONLY

UNIT TERMINALS ARE NOT DESIGNED TO ACCEPT ANY OTHER WIRING

IMPORTANT!
DO NOT ENERGIZE UNIT UNTIL CHECK-OUT AND START-UP PROCEDURE HAS BEEN COMPLETED

METAL PLATE 10 X 15

DRAWING 2307-0832
REVISION DATE:
REVISION NOTE:
DATE: 06/01/93

2307-4139
THE TRANE COMPANY
LA CROSSE, WISCONSIN
PRINTED IN U.S.A.
2307-1994

PART NUMBER
PPL-UN-S/S-RAUC
SCROLL
2307-4139
8

SPLIT SYSTEM CONDENSING UNIT
AIR COOLED
SCROLL COMPRESSOR
LINE VOLTAGE 208/230 460 575/60/CONCH
VOLTAGE DE TOLER 190 CONTROLS
SHEET 1 OF 2

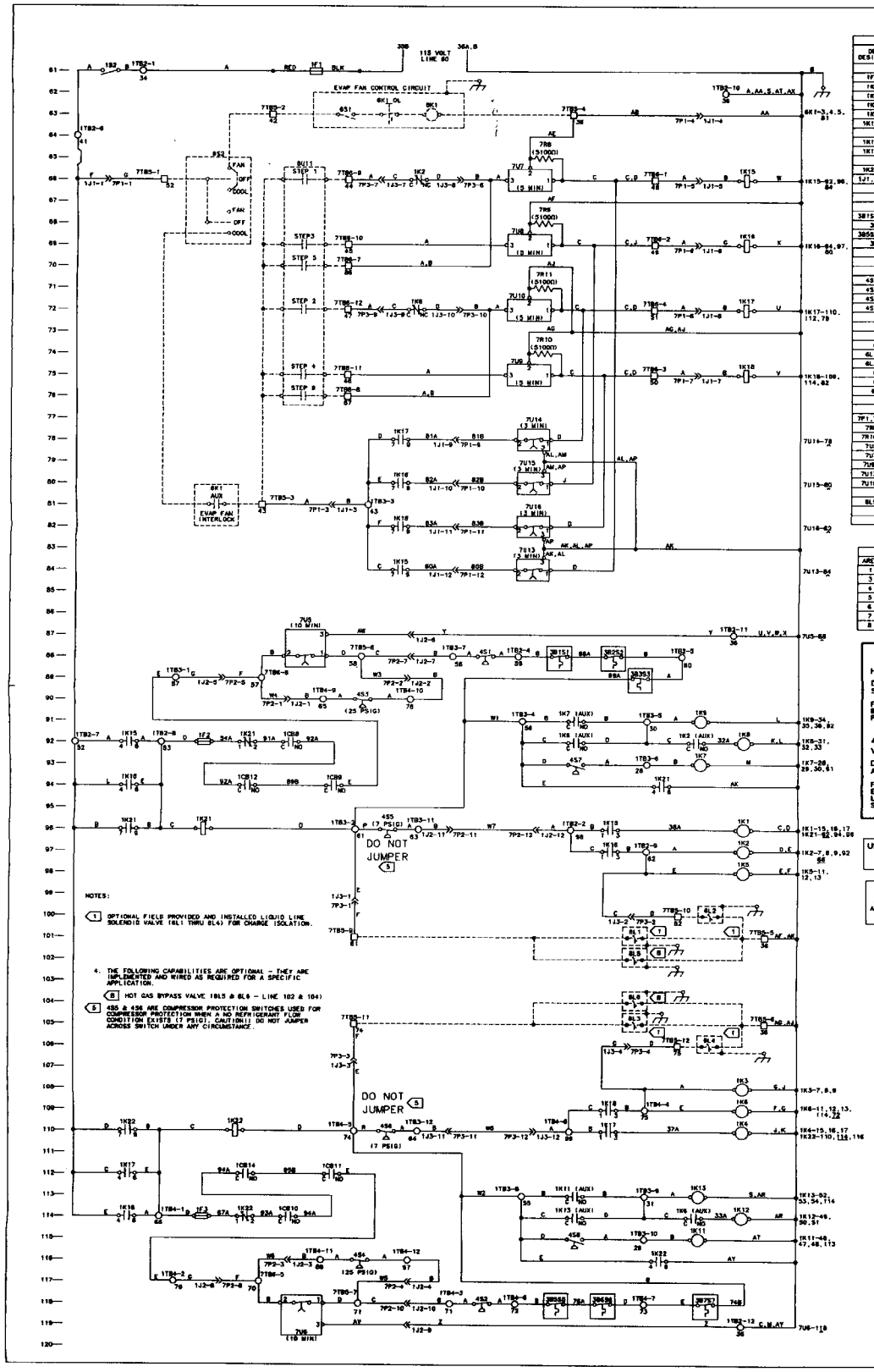

LEGEND		
DEVICE DESIGNATION	DESCRIPTION	LINE NUMBER
1F1	CONTROL CIRCUIT FUSE	81
1F2, 1F3	COMPR PROTECTION FUSE	92,114
1K1, 1K2	COMPRESSOR CONTACTOR	96,97
1K3, 1K4	COMPRESSOR CONTACTOR	108,110
1K5, 1K6	COMPRESSOR CONTACTOR	98,109
1K7-1K9	CONDENSER FAN CONTACTOR	91,92,93
1K11-1K13	CONDENSER FAN CONTACTOR	113,114,115
1K15, 1K16	COOLING RELAY	66,68
1K17, 1K18	COOLING RELAY	71,73
1K21, 1K22	RESET RELAY	96,110
1J1,1J2,1J3	PLUG CONNECTOR	
1S2	CONTROL CIRCUIT SWITCH	61
3B151, 3B252	COMPR WINDING THERMOSTAT	88,89
3B353	COMPR WINDING THERMOSTAT	89
3B565, 3B696	COMPR WINDING THERMOSTAT	116,118
3B757	COMPR WINDING THERMOSTAT	118
4S1,4S2	HIGH PRESSURE CUTOUT	96,116
4S3,4S4	LOW PRESSURE CUTOUT	90,116
4S5,4S6	COMPR PROTECTION SWITCH	96,110
4S7,4S8	FAN PRESSURE CONTROL	93,115
6K1	EVAP FAN STARTER	63
6L1,6L2	LIQUID LINE SOLENOID	100,101
6L3,6L4	LIQUID LINE SOLENOID	109,108
6S1	EVAP FAN CONTROL SWITCH	63
6S3	SYSTEM CONTROL SWITCH	65
6U11	6 STEP CONTROLLER	66
7P1,7P2,7P3	PLUG CONNECTOR	
7R8,7R9	LOAD RESISTOR	65,68
7R10,7R11	LOAD RESISTOR	71,74
7U5,7U6	LOW PRESSURE TIMER	87,116
7U7,7U8	COMPR FIXED OFF TIMER	66,69
7U9,7U10	COMPR FIXED OFF TIMER	70,72
7U13,7U14	COMPR FIXED ON TIMER	64,78
7U15,7U16	COMPR FIXED ON TIMER	80,82
8L5,8L6	HOT GAS BYPASS	102,104

DEVICE PREFIX LOCATION CODE	
AREA	LOCATION
1	CONTROL PANEL
3	COMPRESSOR
4	EXTERNAL MOUNTED COMPONENTS
5	EXTERNAL MOUNTED COMPONENTS
6	CUSTOMER PROVIDED DEVICE
7	OPTIONAL CONTROL PLATE
8	FIELD INSTALLED DEVICE

⚠ WARNING

HAZARDOUS VOLTAGE!

DISCONNECT POWER BEFORE SERVICING.

FAILURE TO DISCONNECT POWER BEFORE SERVICING CAN CAUSE SEVERE PERSONAL INJURY OR DEATH.

⚠ AVERTISSEMENT

VOLTAGE HASARDEUX!

DECONNECTEZ LA SOURCE ELECTRIQUE AVANT D'EFFECTUER L'ENTRETIEN.

FAUTE DE DECONNECTER LA SOURCE ELECTRIQUE AVANT D'EFFECTUER L'ENTRAINER DES BLESSURES CORPORELLES SEVERES OU LA MORT.

USE COPPER CONDUCTORS ONLY

UNIT TERMINALS ARE NOT DESIGNED TO ACCEPT ANY OTHER WIRING

IMPORTANT!
DO NOT ENERGIZE UNIT UNTIL CHECK-OUT AND START-UP PROCEDURE HAS BEEN COMPLETED

METAL PLATE 10 X 15

DRAWING 2307-0832
REVISION DATE:
REVISION NOTE:
DATE: 06/01/93

2307-4139
THE TRANE COMPANY
LA CROSSE, WISCONSIN
PRINTED IN U.S.A.
2307-1994

PART NUMBER
PPL-UN-S/S-RAUC
SCROLL
2307-4139
8

SPLIT SYSTEM CONDENSING UNIT
AIR COOLED
SCROLL COMPRESSOR
LINE VOLTAGE 208/230 460 575/60/CONCH
VOLTAGE DE TOLER 190 CONTROLS
SHEET 1 OF 2