LEGEND		
DEVICE DESIGNATION	DESCRIPTION	LINE NUMBER
1TB8	CONTROL TERMINAL BLOCK	3
1U50	HEAT MODULE	4,6,21,37
3U72	SUPPLY VAR. FREQ. DRIVE	35
4B11	COMBUSTION BLOWER MOTOR	7
4DL6	SEQUENCING TIME DELAY	27
4E1	ELECTRODE	19
4K33	COMBUSTION BLOWER RELAY	37
4K120	HEAT FAIL RELAY	13
4L7	GAS SOLENOID	32,33
4L9	PILOT SOLENOID	14
4L10	SAFETY SOLENOID	29
4S24	CONTROL CIRCUIT SWITCH	4
4S25	COMBUSTION AIR FLOW SWITCH	10
4S26	HIGH LIMIT CUTOUT	12
4S38	SUPPLY AIR FLOW SWITCH	10
4T7	IGNITION TRANSFORMER	16
4TB14,4TB15	CONTROL TERMINAL BLOCK	
4U18	IGNITION CONTROL BOARD	12
4U19	FLAME ROD	24

DEVICE PREFIX LOCATION CODE	
AREA	LOCATION
1	INSIDE UNIT CONTROL PANEL
3	AIR HANDLER SECTION
4	GAS HEAT SECTION

IMPORTANT!
DO NOT ENERGIZE UNIT UNTIL CHECK-OUT AND START-UP PROCEDURE HAS BEEN COMPLETED

CAUTION
IF ANY OF THE EXISTING WIRING AS SUPPLIED WITH THE APPLIANCE MUST BE REPLACED, IT MUST BE REPLACED WITH WIRING RATED FOR 105(C OR ITS EQUIVALENT

⚠ WARNING

HAZARDOUS VOLTAGE!

DISCONNECT ALL ELECTRIC POWER INCLUDING REMOTE DISCONNECTS BEFORE SERVICING.

FAILURE TO DISCONNECT POWER BEFORE SERVICING CAN CAUSE SEVERE PERSONAL INJURY OR DEATH.

⚠ AVERTISSEMENT

VOLTAGE HASARDEUX!

DECONNECTEZ TOUTES LES SOURCES ELECTRIQUES INCLUANT LES DISJONCTEURS SITUES A DISTANCE AVANT D'EFFECTUER L'ENTRETIEN.

FAUTE DE DECONNECTER LA SOURCE ELECTRIQUE AVANT D'EFFECTUER L'ENTRETIEN PEUT ENTRAINER DES BLESSURES CORPORELLES SEVERES OU LA MORT.

⚠ CAUTION

USE COPPER CONDUCTORS ONLY!

UNIT TERMINALS ARE NOT DESIGNED TO ACCEPT OTHER TYPES OF CONDUCTORS.

FAILURE TO DO SO MAY CAUSE DAMAGE TO THE EQUIPMENT.

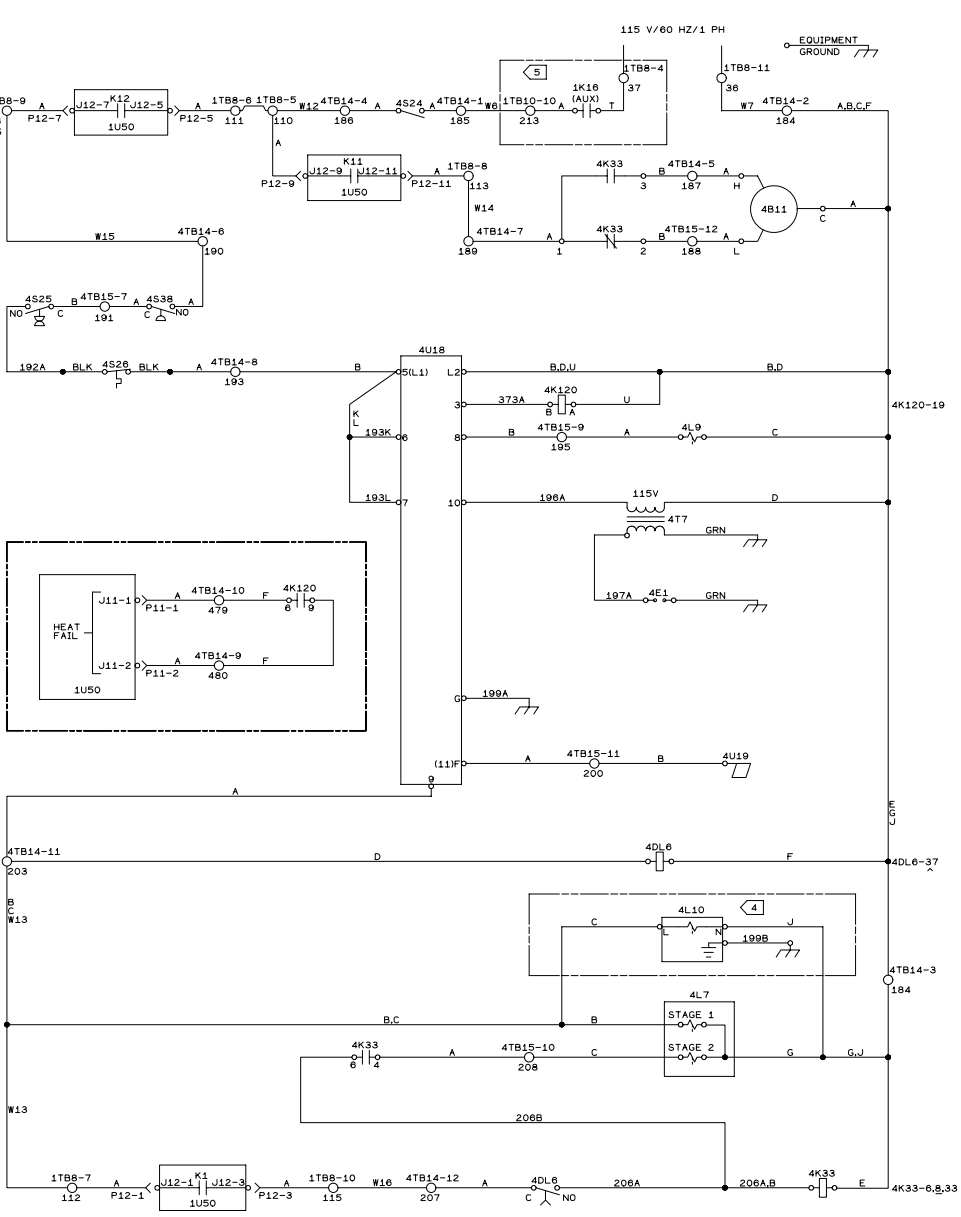

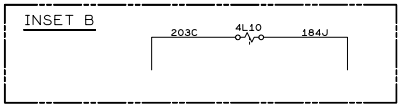

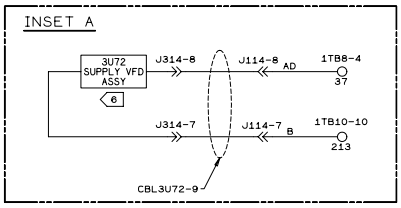

NOTES:

1. UNLESS OTHERWISE NOTED, ALL SWITCHES ARE SHOWN AT 25° C (77° F), AT ATMOSPHERIC PRESSURE, AT 50% RELATIVE HUMIDITY, WITH ALL UTILITIES TURNED OFF, AND AFTER A NORMAL SHUTDOWN HAS OCCURRED.
2. DASHED LINES INDICATE RECOMMENDED FIELD WIRING BY OTHERS. DASHED LINE ENCLOSURES AND/OR DASHED DEVICE OUTLINES INDICATE COMPONENTS PROVIDED BY THE FIELD. PHANTOM LINE ENCLOSURES INDICATE ALTERNATE CIRCUITRY OR AVAILABLE SALES OPTIONS. SOLID LINE INDICATES WIRING BY TRANE CO.
3. NUMBERS ALONG THE RIGHT SIDE OF THE SCHEMATIC DESIGNATE THE LOCATION OF CONTACTS BY LINE NUMBER. AN UNDERLINED NUMBER INDICATES A NORMALLY CLOSED CONTACT. AN OPEN ARROWHEAD BELOW THE LINE NUMBER POINTING UPWARD INDICATES A TIMED CONTACT WHICH BEGINS TIMING WHEN ENERGIZED.

4 — 500 AND 850 MBH UL WIRING SHOWN. FOR CSA WIRING AND 1000 MBH UL WIRING SEE INSETS "B" & "C".

5 — WHEN UNIT HAS SUPPLY FAN V.F.D. OPTION SEE INSET "A" FOR CONNECTIONS.

6 — SEE APPLICABLE 3U72 SUPPLY VARIABLE FREQUENCY DRIVE DIAGRAM FOR BALANCE OF CIRCUIT.

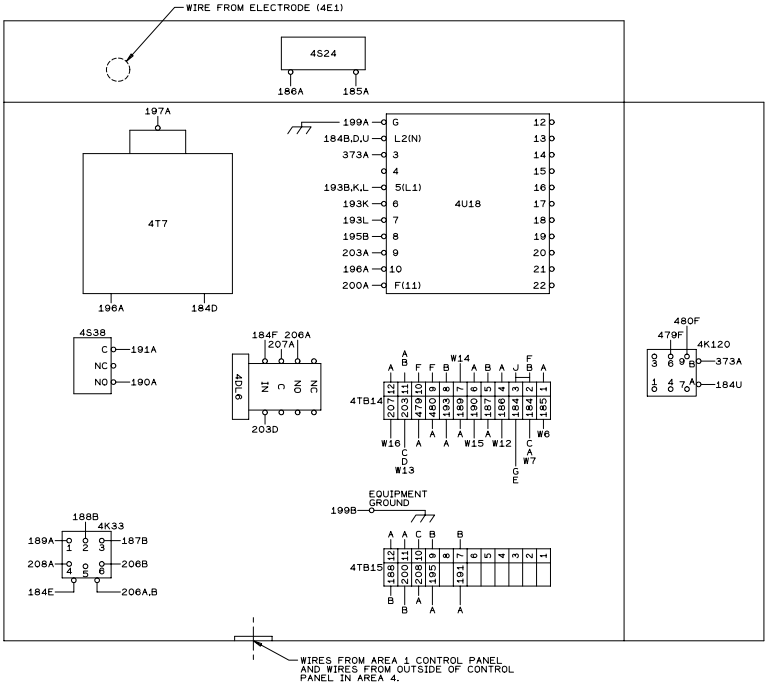

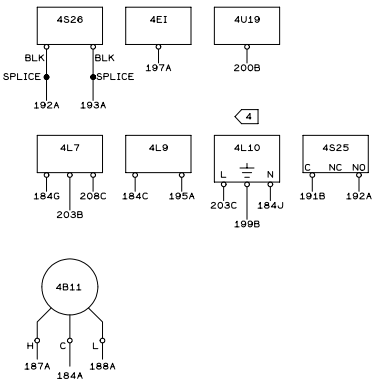

9.5 X 14.25 METAL PLATE

TRANE
A DIVISION OF AMERICAN STANDARD INC.
TYLER, MINNESOTA 55792-9370
DRAWN BY: T.BERNEST
DATE: 09/0/96
REPLACES:
REVISION DATE:
CAD055
SIMILAR TO 2306-9937

FILE NUMBER:

ROOFTOP PACKAGED AIR CONDITIONER
SCHEMATIC & CONNECTION WIRING
500, 850 & 1000 MBH
2-STAGE NATURAL GAS HEAT
20-130 TON SFHF SFHG

DRAWING NUMBER: 2307-3958

REV: A