ABSORPTION LIQUID CHILLER

ABSC SINGLE-STAGE STEAM OR HOT WATER ABSORPTION
UNIT SCHEMATIC WIRING DIAGRAM

DATE: 3-10-97

MAIN POWER CONNECTION, STARTER CONTROL MODULE AND PUMP MOTOR

DRAWING NUMBER 2307-3287 REV A

SHEET 1 OF 4

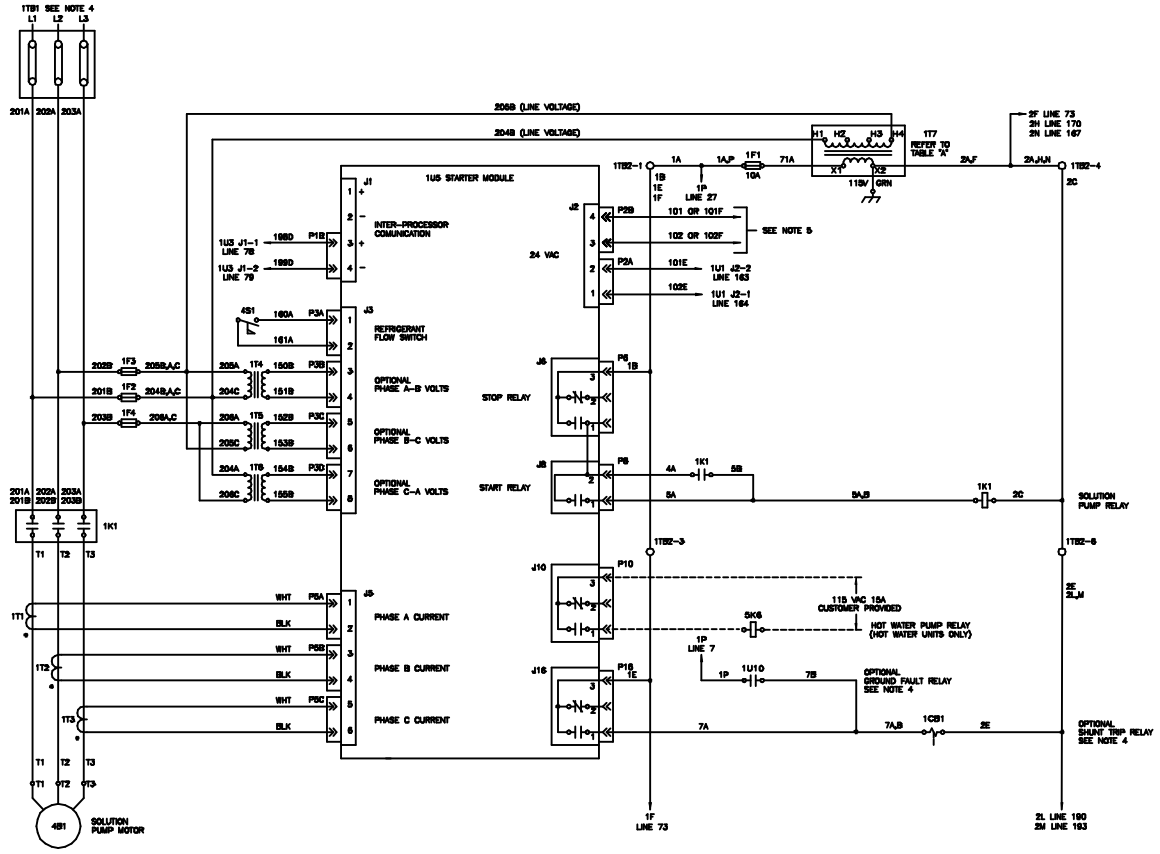

TABLE "A"	
LINE VOLTAGE	CONNECTION
200 - 60 HZ	H1 AND H2
230 - 60 HZ	H1 AND H3
380 - 60 HZ	H1 AND H4
460 - 60 HZ	H1 AND H4
575 - 60 HZ	H1 AND H2
190 - 50 HZ	H1 AND H2
220 - 50 HZ	H1 AND H2
380 - 50 HZ	H1 AND H3
415 - 50 HZ	H1 AND H4
660 - 50 HZ	H1 AND H4

NOTE:

1. SOLID LINES INDICATE WIRING BY THE TRANE COMPANY AND DASHED LINES INDICATE FIELD WIRING PROVIDED BY CUSTOMER. REFER TO FIELD WIRING LAYOUT AND CONNECTION DIAGRAMS TO DETERMINE THE ACTUAL CUSTOMER SUPPLIED DEVICES AND WIRING REQUIRED ON THE UNIT.
2. UNLESS OTHERWISE SPECIFIED, ALL SWITCHES ARE SHOWN AT 25°C (77°F), AT ATMOSPHERIC PRESSURE, AT 50% RELATIVE HUMIDITY, WITH ALL UTILITIES TURNED OFF AND AFTER A NORMAL SHUTDOWN HAS OCCURRED.
3. ALL TRANE DEVICES AND ASSOCIATED WIRING MARKED AS OPTIONAL MAY NOT BE PRESENT ON THE UNIT UNLESS REQUIRED BY CONTROL OPTIONS SPECIFIED ON THE SALES ORDER. REFER TO THE AS-BUILT SCHEMATIC WIRING DIAGRAM SUPPLIED WITH THE UNIT TO DETERMINE OPTIONAL TRANE DEVICES AND WIRING ACTUALLY SUPPLIED ON THE UNIT.
4. TERMINAL BLOCK SHOWN. OPTIONAL CONTROL PANEL POWER CONNECTIONS MAY BE TO A FUSED OR NON-FUSED DISCONNECT SWITCH, OR A CIRCUIT BREAKER WITH OR WITHOUT SHUNT TRIP AND GROUND FAULT PROTECTION RELAYS, AS SPECIFIED ON THE SALES ORDER FOR THE UNIT.
5. IF 1U9 OPTIONS MODULE IS PRESENT:

   WIRE 101F CONNECTS TO 1U9 J2-2, LINE 144 AND WIRE 102F CONNECTS TO 1U9 J2-1, LINE 145.

   IF 1U8 IPC BUFFER MODULE AND/OR 1U7 PRINTER COMMUNICATION MODULE AND/OR 1U6 TRACER COMMUNICATION MODULE IS PRESENT AND 1U9 OPTIONS MODULE IS NOT PRESENT, THE ORDER OF WIRING PREFERENCE IS:

   WIRE 101 CONNECTS TO 1U8 J3A-A, LINE 216 AND WIRE 102 CONNECTS TO 1U8 J3A-B, LINE 217
   OR
   WIRE 101 CONNECTS TO 1U6 J3A-A, LINE 228 AND WIRE 102 CONNECTS TO 1U6 J3A-B, LINE 229
   OR
   WIRE 101 CONNECTS TO 1U7 J3A-A, LINE 256 AND WIRE 102 CONNECTS TO 1U7 J3A-B, LINE 256

DEVICE PREFIX CODE:

1 = MAIN CONTROL PANEL
3 = REMOTE MOUNTED DEVICE
4 = UNIT MOUNTED DEVICE
5 = PROVIDED BY CUSTOMER

DASHED LINES INDICATE WIRING BY CUSTOMER

THIS DRAWING IS PROPRIETARY AND SHALL NOT BE COPIED OR ITS CONTENTS DISCLOSED TO OUTSIDE PARTIES WITHOUT THE WRITTEN CONSENT OF THE TRANE COMPANY

⚠ WARNING

HAZARDOUS VOLTAGE!

DISCONNECT ALL ELECTRIC POWER INCLUDING REMOTE DISCONNECTS BEFORE SERVICING.

FAILURE TO DISCONNECT POWER BEFORE SERVICING CAN CAUSE SEVERE PERSONAL INJURY OR DEATH.

⚠ AVERTISSEMENT

VOLTAGE HASARDEUX!

DECONNECTEZ TOUTES LES SOURCES ELECTRIQUES INCLUANT LES DISJONCTEURS SITUES A DISTANCE AVANT D'EFFECTUER L'ENTRETIEN.

FAUTE DE DECONNECTER LA SOURCE ELECTRIQUE AVANT D'EFFECTUER L'ENTRETIEN PEUT ENTRAINER DES BLESSURES CORPORELLES SEVERES OU LA MORT.

⚠ CAUTION

USE COPPER CONDUCTORS ONLY!

UNIT TERMINALS ARE NOT DESIGNED TO ACCEPT OTHER TYPES OF CONDUCTORS.

FAILURE TO DO SO MAY CAUSE DAMAGE TO THE EQUIPMENT.