RELEASED 29/Oct/2018 16:15:00 GMT

NOTES:

1. UNLESS OTHERWISE NOTED, ALL SWITCHES ARE SHOWN AT 25° C (77° F), AT ATMOSPHERIC PRESSURE, AT 50% RELATIVE HUMIDITY, WITH ALL UTILITIES TURNED OFF, AND AFTER A NORMAL SHUTDOWN HAS OCCURRED.
2. DASHED LINES INDICATE RECOMMENDED FIELD WIRING BY OTHERS. DASHED LINE ENCLOSURES AND/OR DASHED DEVICE OUTLINES INDICATE COMPONENTS PROVIDED BY THE FIELD. PHANTOM LINE ENCLOSURES INDICATE ALTERNATE CIRCUITRY OR AVAILABLE SALES OPTIONS. SOLID LINE INDICATES WIRING BY TRANE CO.

3 USE COPPER CONDUCTORS ONLY. UNIT TERMINALS ARE NOT DESIGNED TO ACCEPT OTHER TYPES OF CONDUCTORS. FAILURE TO DO SO MAY CAUSE DAMAGE TO THE EQUIPMENT.

4 SEE APPLICABLE HEATING SECTION DIAGRAM FOR BALANCE OF CIRCUIT.

5 CONNECTIONS SHOWN FOR 460V-575V / 60HZ / 3PH. FOR 208V-230V / 60HZ / 3PH, SEE INSET.

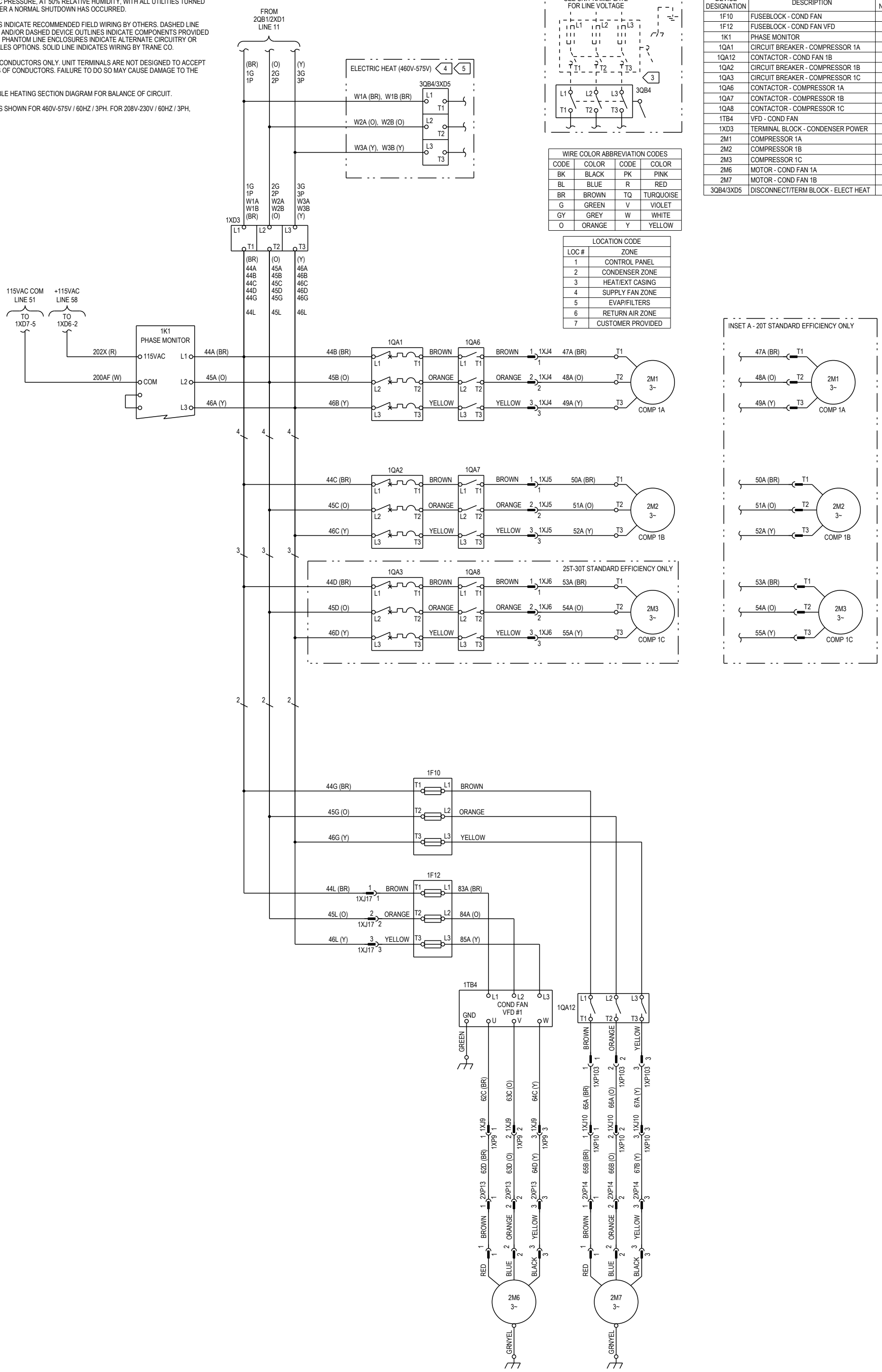

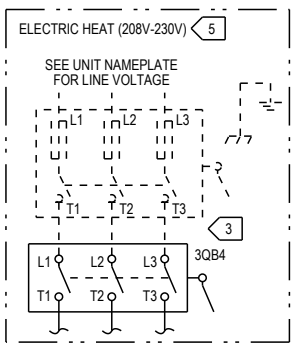

LEGEND		
DEVICE DESIGNATION	DESCRIPTION	LINE NUMBER
1F10	FUSEBLOCK - COND FAN	92
1F12	FUSEBLOCK - COND FAN VFD	96
1K1	PHASE MONITOR	75
1QA1	CIRCUIT BREAKER - COMPRESSOR 1A	75
1QA12	CONTACTOR - COND FAN 1B	100
1QA2	CIRCUIT BREAKER - COMPRESSOR 1B	80
1QA3	CIRCUIT BREAKER - COMPRESSOR 1C	84
1QA6	CONTACTOR - COMPRESSOR 1A	75
1QA7	CONTACTOR - COMPRESSOR 1B	80
1QA8	CONTACTOR - COMPRESSOR 1C	84
1TB4	VFD - COND FAN	100
1XD3	TERMINAL BLOCK - CONDENSER POWER	70
2M1	COMPRESSOR 1A	75
2M2	COMPRESSOR 1B	80
2M3	COMPRESSOR 1C	84
2M6	MOTOR - COND FAN 1A	112
2M7	MOTOR - COND FAN 1B	112
3QB4/3XD5	DISCONNECT/TERM BLOCK - ELECT HEAT	65

WIRE COLOR ABBREVIATION CODES			
CODE	COLOR	CODE	COLOR
BK	BLACK	PK	PINK
BL	BLUE	R	RED
BR	BROWN	TQ	TURQUOISE
G	GREEN	V	VIOLET
GY	GREY	W	WHITE
O	ORANGE	Y	YELLOW

LOCATION CODE	
LOC #	ZONE
1	CONTROL PANEL
2	CONDENSER ZONE
3	HEAT/EXT CASING
4	SUPPLY FAN ZONE
5	EVAP/FILTERS
6	RETURN AIR ZONE
7	CUSTOMER PROVIDED

DESIGNER:	D. CONDIE
ENGINEER:	R. ROBINSON
TRANE © DATE:	04/11/18
REPLACES:	- - -
SIMILAR TO:	- - - - - -
REVISION DATE:	10/23/18
REVISED BY:	K. EDWARDS
APPROVED BY:	L. D'ALBANI
CAD SYSTEM USED:	PRO/ DIAGRAM

TRANE ®

THIS DRAWING IS PROPRIETARY AND SHALL NOT BE COPIED OR ITS CONTENTS DISCLOSED TO OUTSIDE PARTIES WITHOUT THE WRITTEN CONSENT OF TRANE.

IEC DESIGN COMPLIANT

INTELLIPAK

DIAGRAM

POWER SCHEMATIC - 20T-30T REFRIGERATION SYSTEMS WITH CONDENSER FAN VFD

MASTER NUMBER:	DRAWING NUMBER:	SHEET:	REV
12132574	12132577	2 OF 7	C