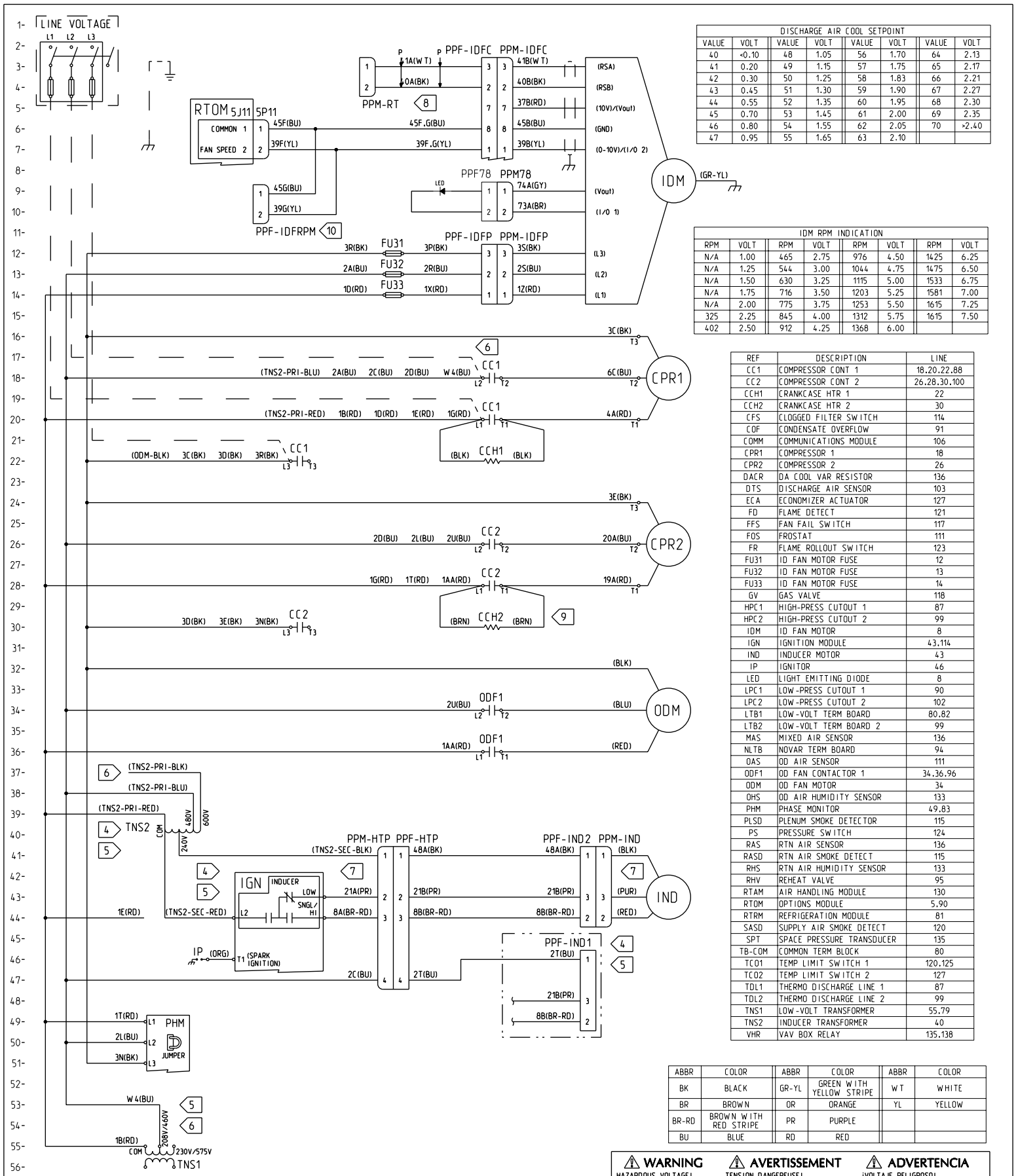

DISCHARGE AIR COOL SETPOINT							
VALUE	VOLT	VALUE	VOLT	VALUE	VOLT	VALUE	VOLT
40	<0.10	48	1.05	56	1.70	64	2.13
41	0.20	49	1.15	57	1.75	65	2.17
42	0.30	50	1.25	58	1.83	66	2.21
43	0.45	51	1.30	59	1.90	67	2.27
44	0.55	52	1.35	60	1.95	68	2.30
45	0.70	53	1.45	61	2.00	69	2.35
46	0.80	54	1.55	62	2.05	70	>2.40
47	0.95	55	1.65	63	2.10		

IDM RPM INDICATION							
RPM	VOLT	RPM	VOLT	RPM	VOLT	RPM	VOLT
N/A	1.00	465	2.75	976	4.50	1425	6.25
N/A	1.25	544	3.00	1044	4.75	1475	6.50
N/A	1.50	630	3.25	1115	5.00	1533	6.75
N/A	1.75	716	3.50	1203	5.25	1581	7.00
N/A	2.00	775	3.75	1253	5.50	1615	7.25
325	2.25	845	4.00	1312	5.75	1615	7.50
402	2.50	912	4.25	1368	6.00		

REF	DESCRIPTION	LINE
CC1	COMPRESSOR CONT 1	18,20,22,88
CC2	COMPRESSOR CONT 2	26,28,30,100
CCH1	CRANKCASE HTR 1	22
CCH2	CRANKCASE HTR 2	30
CFS	CLOGGED FILTER SWITCH	114
COF	CONDENSATE OVERFLOW	91
COMM	COMMUNICATIONS MODULE	106
CPR1	COMPRESSOR 1	18
CPR2	COMPRESSOR 2	26
DACR	DA COOL VAR RESISTOR	136
DTS	DISCHARGE AIR SENSOR	103
ECA	ECONOMIZER ACTUATOR	127
FD	FLAME DETECT	121
FFS	FAN FAIL SWITCH	117
FOS	FROSTAT	111
FR	FLAME ROLLOUT SWITCH	123
FU31	ID FAN MOTOR FUSE	12
FU32	ID FAN MOTOR FUSE	13
FU33	ID FAN MOTOR FUSE	14
GV	GAS VALVE	118
HPC1	HIGH-PRESS CUTOUT 1	87
HPC2	HIGH-PRESS CUTOUT 2	99
IDM	ID FAN MOTOR	8
IGN	IGNITION MODULE	43,114
IND	INDUCER MOTOR	43
IP	IGNITOR	46
LED	LIGHT EMITTING DIODE	8
LPC1	LOW-PRESS CUTOUT 1	90
LPC2	LOW-PRESS CUTOUT 2	102
LTB1	LOW-VOLT TERM BOARD	80,82
LTB2	LOW-VOLT TERM BOARD 2	99
MAS	MIXED AIR SENSOR	136
NLTB	NOVAR TERM BOARD	94
OAS	OD AIR SENSOR	111
ODF1	OD FAN CONTACTOR 1	34,36,96
ODM	OD FAN MOTOR	34
OHS	OD AIR HUMIDITY SENSOR	133
PHM	PHASE MONITOR	49,83
PLSD	PLENUM SMOKE DETECTOR	115
PS	PRESSURE SWITCH	124
RAS	RTN AIR SENSOR	136
RASD	RTN AIR SMOKE DETECT	115
RHS	RTN AIR HUMIDITY SENSOR	133
RHV	REHEAT VALVE	95
RTAM	AIR HANDLING MODULE	130
RTOM	OPTIONS MODULE	5,90
RTRM	REFRIGERATION MODULE	81
SASD	SUPPLY AIR SMOKE DETECT	120
SPT	SPACE PRESSURE TRANSDUCER	135
TB-COM	COMMON TERM BLOCK	80
TCO1	TEMP LIMIT SWITCH 1	120,125
TCO2	TEMP LIMIT SWITCH 2	127
TDL1	THERMO DISCHARGE LINE 1	87
TDL2	THERMO DISCHARGE LINE 2	99
TNS1	LOW-VOLT TRANSFORMER	55,79
TNS2	INDUCER TRANSFORMER	40
VHR	VAV BOX RELAY	135,138

ABBR	COLOR	ABBR	COLOR	ABBR	COLOR
BK	BLACK	GR-YL	GREEN WITH YELLOW STRIPE	WT	WHITE
BR	BROWN	OR	ORANGE	YL	YELLOW
BR-RD	BROWN WITH RED STRIPE	PR	PURPLE		
BU	BLUE	RD	RED		

⚠ WARNING

HAZARDOUS VOLTAGE!

DISCONNECT ALL ELECTRIC POWER INCLUDING REMOTE DISCONNECTS AND FOLLOW LOCK OUT AND TAG PROCEDURES BEFORE SERVICING. INSURE THAT ALL MOTOR CAPACITORS HAVE DISCHARGED STORED VOLTAGE. UNITS WITH VARIABLE SPEED DRIVE, REFER TO DRIVE INSTRUCTIONS FOR CAPACITOR DISCHARGE.

FAILURE TO DO THE ABOVE BEFORE SERVICING COULD RESULT IN DEATH OR SERIOUS INJURY.

⚠ AVERTISSEMENT

TENSION DANGEREUSE!

COUPER TOUTES LES TENSIONS ET OUVRIR LES SECTIONNEURS À DISTANCE. PUIS SUIVRE LES PROCÉDURES DE VERROUILLAGE ET DES ÉTIQUETTES AVANT TOUTE INTERVENTION. VÉRIFIER QUE TOUS LES CONDENSATEURS DES MOTEURS SONT DÉCHARGÉS. DANS LE CAS D'UNITÉS COMPORTANT DES ENTRAÎNEMENTS À VITESSE VARIABLE, SE REPORTER AUX INSTRUCTIONS DE L'ENTRAÎNEMENT POUR DÉCHARGER LES CONDENSATEURS.

NE PAS RESPECTER CES MESURES DE PRÉCAUTION PEUT ENTRAÎNER DES BLESSURES GRAVES POUVANT ÊTRE MORTELLES.

⚠ ADVERTENCIA

¡VOLTAJE PELIGROSO!

DESCONECTE TODA LA ENERGÍA ELÉCTRICA, INCLUSO LAS DESCONEXIONES REMOTAS Y SIGA LOS PROCEDIMIENTOS DE CIERRE Y ETIQUETADO ANTES DE PROCEDER AL SERVICIO. ASEGÚRESE DE QUE TODOS LOS CAPACITORES DEL MOTOR HAYAN DESCARGADO EL VOLTAJE ALMACENADO. PARA LAS UNIDADES CON EJE DE DIRECCIÓN DE VELOCIDAD VARIABLE, CONSULTE LAS INSTRUCCIONES PARA LA DESCARGA DEL CONDENSADOR.

EL NO REALIZAR LO ANTERIORMENTE INDICADO, PODRÍA OCASIONAR LA MUERTE O SERIAS LESIONES PERSONALES.

NOTES:

1. UNLESS OTHERWISE NOTED, ALL SWITCHES ARE SHOWN AT 25°C (77°F), AT ATMOSPHERIC PRESSURE, AT 50% RELATIVE HUMIDITY WITH ALL UTILITIES TURNED OFF AND AFTER A NORMAL SHUTDOWN HAS OCCURED.
2. DASHED LINES INDICATE RECOMMENDED FIELD WIRING BY OTHERS. DASHED LINE ENCLOSURES AND/OR DASHED DEVICE OUTLINES INDICATE COMPONENETS PROVIDED BY THE FIELD. PHANTOM LINE ENCLOSURES INDICATE ALTERNATE CIRCUITRY OR AVAILABLE SALES OPTIONS.
3. THREE-PHASE MOTORS ARE PROTECTED UNDER PRIMARY SINGLE PHASING CONDITIONS. ALL MOTORS HAVE INTERNAL OVERLOAD PROTECTION AND COMPRESSORS HAVE INTERNAL THERMAL PROTECTION.

4. CONNECTIONS SHOWN ARE FOR 460V/60HZ/3PH OPERATION. WHEN 208V/60HZ/3PH OPERATION IS REQUIRED, CONNECT WIRE 1E TO IGN-INDUCER-L2. ALSO, USE PLUG PPF-IND1 IN PLACE OF PPF-IND2. WIRE 48A, PLUG PPF-IND2, TNS2, AND TNS2'S WIRES ARE NOT PRESENT ON A 208-230V/60HZ/3PH UNIT.

5. CONNECTIONS SHOWN ARE FOR 460V/60HZ/3PH OPERATION. WHEN 230V/60HZ/3PH OPERATION IS REQUIRED, MOVE WIRE W4 FROM TNS1-208V TO TNS1-230V. ALSO, CONNECT WIRE 1E TO IGN-INDUCER-L2. ALSO, USE PLUG PPF-IND1 IN PLACE OF PPF-IND2. WIRE 48A, PLUG PPF-IND2, TNS2, AND TNS2'S WIRES ARE NOT PRESENT ON A 208-230V/60HZ/3PH UNIT.

6. CONNECTIONS SHOWN ARE FOR 460V/60HZ/3PH OPERATION. WHEN 575V/60HZ/3PH OPERATION IS REQUIRED, MOVE WIRE W4 FROM TNS1-460V TO TNS1-575V. ALSO, REMOVE WIRE TNS2-PRI-BLU FROM CC1-L2 AND CONNECT WIRE TNS2-PRI-BLK TO CC1-L2.

7. CONNECTIONS SHOWN ARE FOR DUAL-STAGE GAS HEAT OPERATION. WHEN SINGLE-STAGE GAS HEAT OPERATION IS REQUIRED, WIRE 21A IS NOT CONNECTED TO IGN. WIRE IND-PUR IS NOT PRESENT ON A SINGLE-STAGE GAS HEAT UNIT.

8. PLUG PPM-RT IS NOT CONNECTED TO ANYTHING. IT IS ONLY USED FOR FACTORY RUNTEST HOOKUP.

9. CCH2 LEADS ARE BLACK WITH BROWN TAPE WRAPPED AROUND THE END OF EACH LEAD.

10. IDM RPM INDICATION 0-7.5VDC. SEE RPM TABLE.

IMPORTANT

DO NOT ENERGIZE UNIT UNTIL CHECK-OUT AND START-UP PROCEDURE HAS BEEN COMPLETED.

CAUTION

USE COPPER CONDUCTORS ONLY!

UNIT TERMINALS ARE NOT DESIGNED TO ACCEPT OTHER TYPES OF CONDUCTORS.

FAILURE TO DO SO MAY CAUSE DAMAGE TO THE EQUIPMENT.

ATTENTION

N'UTILISER QUE DES CONDUCTEURS EN CUIVRE!

LES BORNES DE L'UNITÉ NE SONT PAS CONÇUES POUR RECEVOIR D'AUTRES TYPES DE CONDUCTEURS.

L'UTILISATION DE TOUT AUTRE CONDUCTEUR PEUT ENDOMMAGER L'ÉQUIPEMENT.

PRECAUCIÓN

¡UTILICE ÚNICAMENTE CONDUCTORES DE COBRE!

LAS TERMINALES DE LA UNIDAD NO ESTÁN DISEÑADAS PARA ACEPTAR OTROS TIPOS DE CONDUCTORES.

SI NO LO HACE, PUEDE OCASIONAR DAÑO AL EQUIPO.

DO NOT SCALE PRINT

THIRD ANGLE PROJECTION

DRAWN BY: N.CHALITA

DATE: 03/01/2017

THIS DRAWING IS PROPRIETARY AND SHALL NOT BE COPIED OR ITS CONTENTS DISCLOSED TO OUTSIDE PARTIES WITHOUT THE WRITTEN CONSENT OF TRANE
© TRANE

TRANE

POWER DIAGRAM
YHC(120)F(3,4)
RELIATEL CONTROLS

12132411

SHEET 1 OF 2

REV A