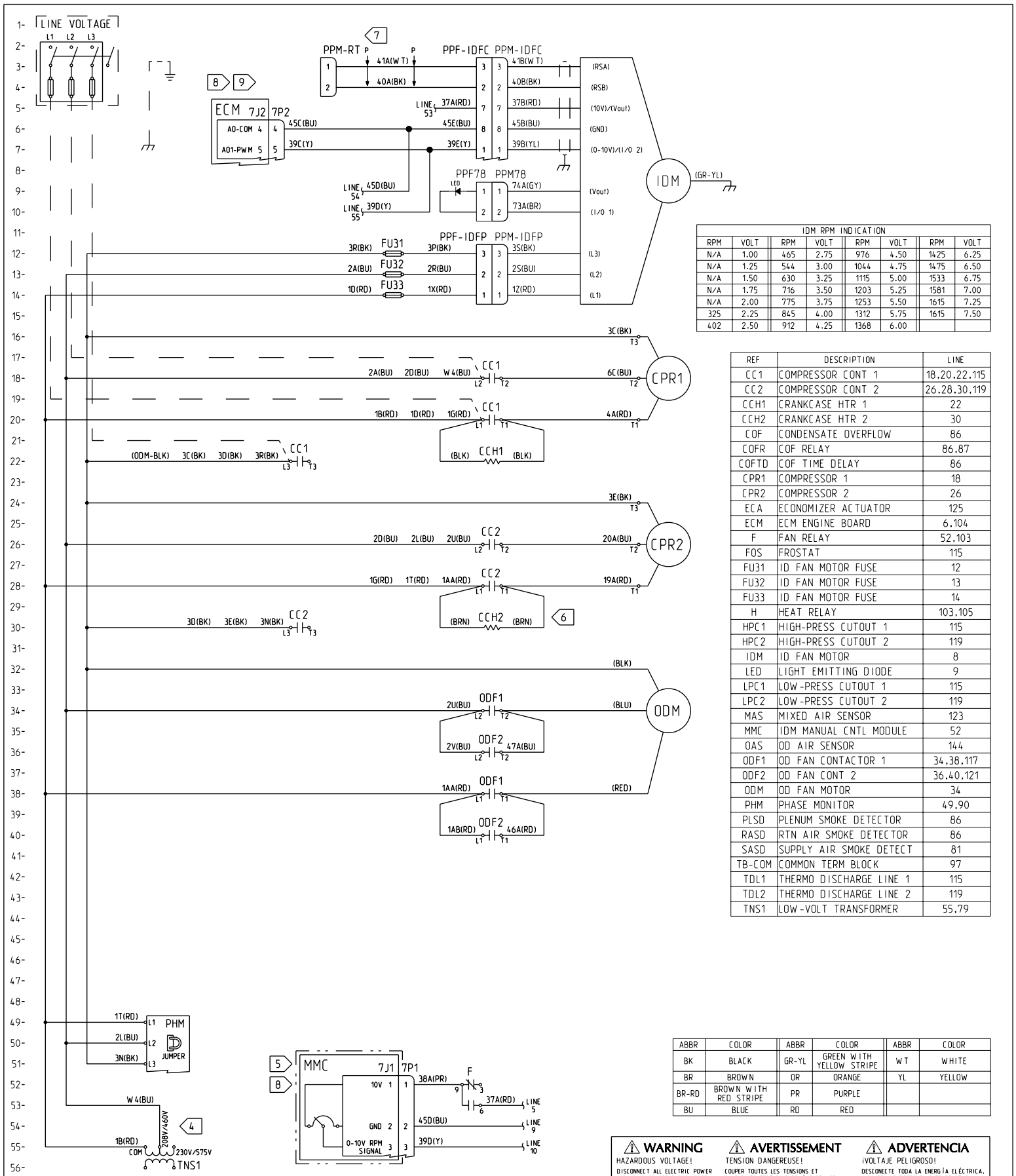

IDM RPM INDICATION							
RPM	VOLT	RPM	VOLT	RPM	VOLT	RPM	VOLT
N/A	1.00	465	2.75	976	4.50	1425	6.25
N/A	1.25	544	3.00	1044	4.75	1475	6.50
N/A	1.50	630	3.25	1115	5.00	1533	6.75
N/A	1.75	716	3.50	1203	5.25	1581	7.00
N/A	2.00	775	3.75	1253	5.50	1615	7.25
325	2.25	845	4.00	1312	5.75	1615	7.50
402	2.50	912	4.25	1368	6.00		

REF	DESCRIPTION	LINE
CC1	COMPRESSOR CONT 1	18.20.22.115
CC2	COMPRESSOR CONT 2	26.28.30.119
CCH1	CRANKCASE HTR 1	22
CCH2	CRANKCASE HTR 2	30
COF	CONDENSATE OVERFLOW	86
COFR	COF RELAY	86.87
COFTD	COF TIME DELAY	86
CPR1	COMPRESSOR 1	18
CPR2	COMPRESSOR 2	26
ECA	ECONOMIZER ACTUATOR	125
ECM	ECM ENGINE BOARD	6.104
F	FAN RELAY	52.103
FOS	FROSTAT	115
FU31	ID FAN MOTOR FUSE	12
FU32	ID FAN MOTOR FUSE	13
FU33	ID FAN MOTOR FUSE	14
H	HEAT RELAY	103.105
HPC1	HIGH-PRESS CUTOUT 1	115
HPC2	HIGH-PRESS CUTOUT 2	119
IDM	ID FAN MOTOR	8
LED	LIGHT EMITTING DIODE	9
LPC1	LOW-PRESS CUTOUT 1	115
LPC2	LOW-PRESS CUTOUT 2	119
MAS	MIXED AIR SENSOR	123
MMC	IDM MANUAL CNTL MODULE	52
OAS	OD AIR SENSOR	144
ODF1	OD FAN CONTACTOR 1	34.38.117
ODF2	OD FAN CONT 2	36.40.121
ODM	OD FAN MOTOR	34
PHM	PHASE MONITOR	49.90
PLSD	PLENUM SMOKE DETECTOR	86
RASD	RTN AIR SMOKE DETECTOR	86
SASD	SUPPLY AIR SMOKE DETECT	81
TB-COM	COMMON TERM BLOCK	97
TDL1	THERMO DISCHARGE LINE 1	115
TDL2	THERMO DISCHARGE LINE 2	119
TNS1	LOW-VOLT TRANSFORMER	55.79

ABBR	COLOR	ABBR	COLOR	ABBR	COLOR
BK	BLACK	GR-YL	GREEN WITH YELLOW STRIPE	WT	WHITE
BR	BROWN	OR	ORANGE	YL	YELLOW
BR-RD	BROWN WITH RED STRIPE	PR	PURPLE		
BU	BLUE	RD	RED		

⚠ WARNING

HAZARDOUS VOLTAGE!

DISCONNECT ALL ELECTRIC POWER INCLUDING REMOTE DISCONNECTS AND FOLLOW LOCK OUT AND TAG PROCEDURES BEFORE SERVICING. INSURE THAT ALL MOTOR CAPACITORS HAVE DISCHARGED STORED VOLTAGE. UNITS WITH VARIABLE SPEED DRIVE, REFER TO DRIVE INSTRUCTIONS FOR CAPACITOR DISCHARGE.

FAILURE TO DO THE ABOVE BEFORE SERVICING COULD RESULT IN DEATH OR SERIOUS INJURY.

⚠ AVERTISSEMENT

TENSION DANGEREUSE!

COUPER TOUTES LES TENSIONS ET OUVRIR LES SECTIONNEURS À DISTANCE. PUIS SUIVRE LES PROCÉDURES DE VERROUILLAGE ET DES ÉTIQUETTES AVANT TOUTE INTERVENTION. VÉRIFIER QUE TOUS LES CONDENSATEURS DES MOTEURS SONT DÉCHARGÉS. DANS LE CAS D'UNITÉS COMPORTANT DES ENTRAÎNEMENTS À VITESSE VARAIBLE, SE REPORTER AUX INSTRUCTIONS DE L'ENTRAÎNEMENT POUR DÉCHARGER LES CONDENSATEURS.

NE PAS RESPECTER CES MESURES DE PRÉCAUTION PEUT ENTRAÎNER DES BLESSURES GRAVES POUVANT ÊTRE MORTELLES.

⚠ ADVERTENCIA

¡VOLTAJE PELIGROSO!

DESCONECTE TODA LA ENERGÍA ELÉCTRICA, INCLUSO LAS DESCONEXIONES REMOTAS Y SIGA LOS PROCEDIMIENTOS DE CIERRE Y ETIQUETADO ANTES DE PROCEDER AL SERVICIO. ASEGÚRESE DE QUE TODOS LOS CAPACITORES DEL MOTOR HAYAN DESCARGADO EL VOLTAJE ALMACENADO. PARA LAS UNIDADES CON EJE DE DIRECCIÓN DE VELOCIDAD VARIABLE, CONSULTE LAS INSTRUCCIONES PARA LA DESCARGA DEL CONDENSADOR.

EL NO REALIZAR LO ANTERIORMENTE INDICADO, PODRÍA OCASIONAR LA MUERTE O SERIAS LESIONES PERSONALES.

NOTES:

1. UNLESS OTHERWISE NOTED, ALL SWITCHES ARE SHOWN AT 25°C (77°F), AT ATMOSPHERIC PRESSURE, AT 50% RELATIVE HUMIDITY WITH ALL UTILITIES TURNED OFF AND AFTER A NORMAL SHUTDOWN HAS OCCURED.
2. DASHED LINES INDICATE RECOMMENDED FIELD WIRING BY OTHERS. DASHED LINE ENCLOSURES AND/OR DASHED DEVICE OUTLINES INDICATE COMPONENETS PROVIDED BY THE FIELD. PHANTOM LINE ENCLOSURES INDICATE ALTERNATE CIRCUITRY OR AVAILABLE SALES OPTIONS.
3. THREE-PHASE MOTORS ARE PROTECTED UNDER PRIMARY SINGLE PHASING CONDITIONS. ALL MOTORS HAVE INTERNAL OVERLOAD PROTECTION AND COMPRESSORS HAVE INTERNAL THERMAL PROTECTION.

4 CONNECTIONS SHOWN ARE FOR 208V/60HZ/3PH OR 460V/60HZ/3PH OPERATION. WHEN 230V/60HZ/3PH OR 575V/60HZ/3PH OPERATION IS REQUIRED, MOVE WIRE W4 FROM TNS1-208V/460V TO TNS1-230V/575V.

5 RPM INDICATION 0-10VDC ACROSS VT AND COM. SEE IDM RPM INDICATION TABLE.

6 CCH2 LEADS ARE BLACK WITH BROWN TAPE WRAPPED AROUND THE END OF EACH LEAD.

7 PLUG PPM-RT IS NOT CONNECTED TO ANYTHING. IT IS ONLY USED FOR FACTORY RUNTEST HOOKUP.

8 IF ECM BOARD CONTROLS ARE USED THEN MMC CONNECTIONS ARE NOT MADE AND VICE VERSA. BOTH SETUPS ARE POSSIBLE AND DEPEND ON BOARD AVAILABILITY.

9 TO INCREASE/DECREASE VOLTAGE/RPMS (SEE IDM RPM INDICATION TABLE):
- A. PUSH AND HOLD THE SET BUTTON FOR 3 SEC. BOARD WILL DISPLAY MOTOR 1 PARAMETER NAME: HI 1.
- B. SLOW PUSH SET AGAIN TO DISPLAY THE PARAMETER'S CURRENT VALUE = 7.50 VOLTS.
- C. PUSH ON + OR - BUTTON TO ADJUST PARAMETER TO DESIRED VALUE = XXX VOLTS.
- D. PUSH AND HOLD SET BUTTON FOR 3 SEC TO "SAVE" THE VALUE. AFTER SAVE IS COMPLETE, HI 1 WILL SHOW AGAIN.
- E. AFTER THE VOLTAGE HI 1 IS SUCCESSFULLY CHANGED, THE DISPLAY SEQUENCE WILL BE:
  MTR 1 --> XXX --> MTR2 --> 0.00 --> FST1 --> ON --> FST2 --> ON/OFF --> EhEn --> ON/OFF
  AND THE MOTOR WILL RAMP UP OR DOWN TO ADJUST TO THE INPUT SIGNAL.

IMPORTANT

DO NOT ENERGIZE UNIT UNTIL CHECK-OUT AND START-UP PROCEDURE HAS BEEN COMPLETED.

CAUTION

USE COPPER CONDUCTORS ONLY!

UNIT TERMINALS ARE NOT DESIGNED TO ACCEPT OTHER TYPES OF CONDUCTORS.

FAILURE TO DO SO MAY CAUSE DAMAGE TO THE EQUIPMENT.

ATTENTION

N'UTILISER QUE DES CONDUCTEURS EN CUIVRE!

LES BORNES DE L'UNITÉ NE SONT PAS CONÇUES POUR RECEVOIR D'AUTRES TYPES DE CONDUCTEURS.

L'UTILISATION DE TOUT AUTRE CONDUCTEUR PEUT ENDOMMAGER L'ÉQUIPEMENT.

PRECAUCIÓN

¡UTILICE ÚNICAMENTE CONDUCTORES DE COBRE!

LAS TERMINALES DE LA UNIDAD NO ESTÁN DISEÑADAS PARA ACEPTAR OTROS TIPOS DE CONDUCTORES.

SI NO LO HACE, PUEDE OCASIONAR DAÑO AL EQUIPO.

DO NOT SCALE PRINT

THIS DRAWING IS PROPRIETARY AND SHALL NOT BE COPIED OR ITS CONTENTS DISCLOSED TO OUTSIDE PARTIES WITHOUT THE WRITTEN CONSENT OF TRANE
© TRANE

DRAWN BY: N.CHALITA

DATE: 03/01/2017

THIRD ANGLE PROJECTION

TRANE

POWER DIAGRAM
THC(120)F(3,4)
ELECTROMECHANICAL CONTROLS

12132405

SHEET 1 OF 2

REV A

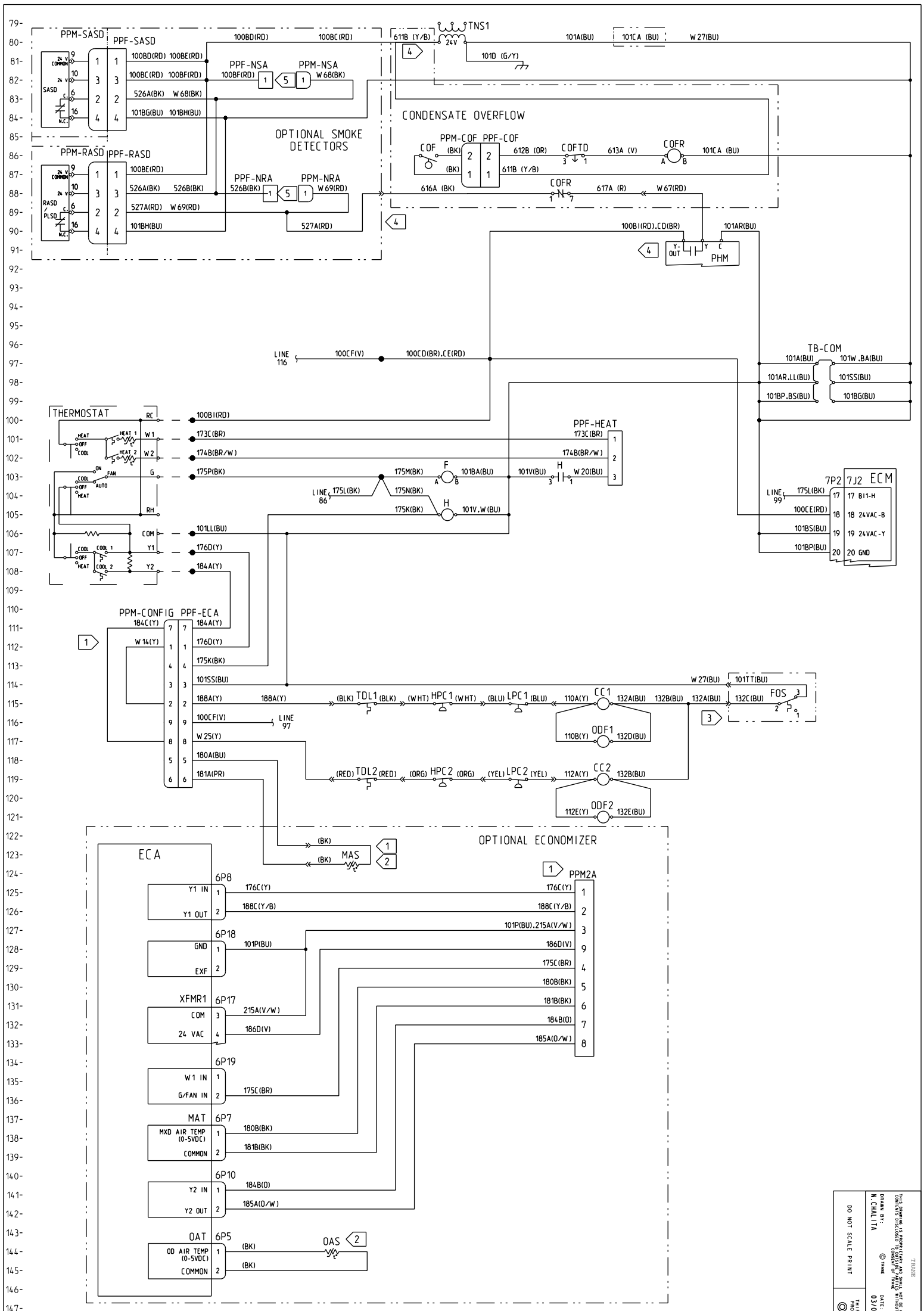

NOTES:

1. TO INSTALL THE OPTIONAL ECONOMIZER, REMOVE PLUG PPM-CONFIG FROM PPF-ECA AND CONNECT PLUG PPM-ECA TO PPF-ECA. ALSO, CONNECT MAS TO WIRES 180A AND 181A.
2. FOR MOTORIZED OUTSIDE AIR DAMPER, OPTIONAL MAS AND OAS (AND ASSOCIATED WIRING) ARE NOT USED.
3. CONNECTIONS SHOWN INCLUDE OPTIONAL FOS. IF FOS IS NOT INSTALLED, CONNECT WIRE W27 TO WIRE 132A.
4. CONNECTIONS SHOWN INCLUDE OPTIONAL SMOKE DETECTORS AND CONDENSATE OVERFLOW. IF ONLY SMOKE DETECTOR(S) (RASD, PLSD OR SASD) ARE INSTALLED, CONNECT 527A TO W67. IF ONLY CONDENSATE OVERFLOW IS INSTALLED, CONNECT616A TO TNS1-24VAC. IF NEITHER OPTION IS INSTALLED, CONNECT W67 TO TNS1-24VAC.
5. CONNECTIONS SHOWN INCLUDE OPTIONAL SMOKE DETECTORS. THE FOLLOWING COMBINATIONS ARE ALLOWED: RASD ONLY, SASD ONLY, RASD & SASD, AND PLSD ONLY. IF RASD OR PLSD IS NOT INSTALLED, CONNECT PLUG PPF-NRA TO PLUG PPM-NRA. IF SASD IS NOT INSTALLED, CONNECT PLUG PPF-NSA TO PPM-NSA.

TRANE
THIS DRAWING IS PROPRIETARY AND SHALL NOT BE COPIED OR ITS CONTENTS DISCLOSED TO OUTSIDE PARTIES WITHOUT THE WRITTEN CONSENT OF TRANE
© TRANE

DRAWN BY: N.CHALITA
DATE: 03/01/2017
THIRD ANGLE PROJECTION
DO NOT SCALE PRINT

CONTROLS DIAGRAM
THC(120)F(3,4)
ELECTROMECHANICAL CONTROLS

12132405
SHEET 2 OF 2
REV A