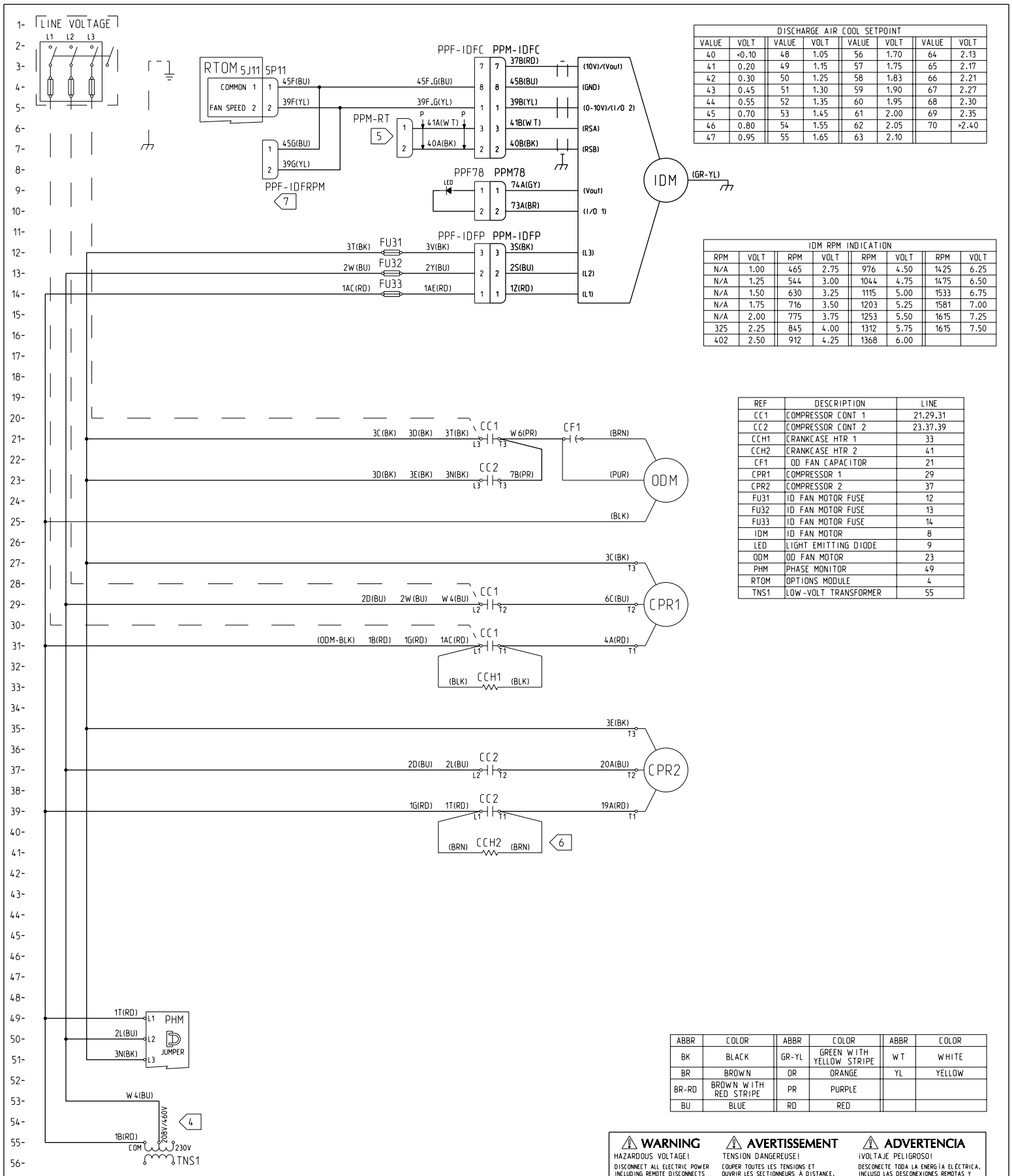

DISCHARGE AIR COOL SETPOINT							
VALUE	VOLT	VALUE	VOLT	VALUE	VOLT	VALUE	VOLT
40	<0.10	48	1.05	56	1.70	64	2.13
41	0.20	49	1.15	57	1.75	65	2.17
42	0.30	50	1.25	58	1.83	66	2.21
43	0.45	51	1.30	59	1.90	67	2.27
44	0.55	52	1.35	60	1.95	68	2.30
45	0.70	53	1.45	61	2.00	69	2.35
46	0.80	54	1.55	62	2.05	70	>2.40
47	0.95	55	1.65	63	2.10		

IDM RPM INDICATION							
RPM	VOLT	RPM	VOLT	RPM	VOLT	RPM	VOLT
N/A	1.00	465	2.75	976	4.50	1425	6.25
N/A	1.25	544	3.00	1044	4.75	1475	6.50
N/A	1.50	630	3.25	1115	5.00	1533	6.75
N/A	1.75	716	3.50	1203	5.25	1581	7.00
N/A	2.00	775	3.75	1253	5.50	1615	7.25
325	2.25	845	4.00	1312	5.75	1615	7.50
402	2.50	912	4.25	1368	6.00		

REF	DESCRIPTION	LINE
CC1	COMPRESSOR CONT 1	21.29.31
CC2	COMPRESSOR CONT 2	23.37.39
CCH1	CRANKCASE HTR 1	33
CCH2	CRANKCASE HTR 2	41
CF1	OD FAN CAPACITOR	21
CPR1	COMPRESSOR 1	29
CPR2	COMPRESSOR 2	37
FU31	ID FAN MOTOR FUSE	12
FU32	ID FAN MOTOR FUSE	13
FU33	ID FAN MOTOR FUSE	14
IDM	ID FAN MOTOR	8
LED	LIGHT EMITTING DIODE	9
ODM	OD FAN MOTOR	23
PHM	PHASE MONITOR	49
RTOM	OPTIONS MODULE	4
TNS1	LOW-VOLT TRANSFORMER	55

ABBR	COLOR	ABBR	COLOR	ABBR	COLOR
BK	BLACK	GR-YL	GREEN WITH YELLOW STRIPE	WT	WHITE
BR	BROWN	OR	ORANGE	YL	YELLOW
BR-RD	BROWN WITH RED STRIPE	PR	PURPLE		
BU	BLUE	RD	RED		

NOTES:

1. UNLESS OTHERWISE NOTED, ALL SWITCHES ARE SHOWN AT 25°C (77°F), AT ATMOSPHERIC PRESSURE, AT 50% RELATIVE HUMIDITY WITH ALL UTILITIES TURNED OFF AND AFTER A NORMAL SHUTDOWN HAS OCCURED.
2. DASHED LINES INDICATE RECOMMENDED FIELD WIRING BY OTHERS. DASHED LINE ENCLOSURES AND/OR DASHED DEVICE OUTLINES INDICATE COMPONENETS PROVIDED BY THE FIELD. PHANTOM LINE ENCLOSURES INDICATE ALTERNATE CIRCUITRY OR AVAILABLE SALES OPTIONS.
3. THREE-PHASE MOTORS ARE PROTECTED UNDER PRIMARY SINGLE PHASING CONDITIONS. ALL MOTORS HAVE INTERNAL OVERLOAD PROTECTION AND COMPRESSORS HAVE INTERNAL THERMAL PROTECTION.

4 CONNECTIONS SHOWN ARE FOR 208V/60HZ/3PH OR 460V/60HZ/3PH OPERATION. WHEN 230V/60HZ/3PH OPERATION IS REQUIRED, MOVE WIRE W4 FROM TNS1-208V/460V TO TNS1-230V.

5 PLUG PPM-RT IS NOT CONNECTED TO ANYTHING. IT IS ONLY USED FOR FACTORY RUNTEST HOOKUP.

6 CCH2 LEADS ARE BLACK WITH BROWN TAPE WRAPPED AROUND THE END OF EACH LEAD.

7 IDM RPM INDICATION 0-7.5VDC. SEE RPM TABLE.

⚠ WARNING

HAZARDOUS VOLTAGE!

DISCONNECT ALL ELECTRIC POWER INCLUDING REMOTE DISCONNECTS AND FOLLOW LOCK OUT AND TAG PROCEDURES BEFORE SERVICING. INSURE THAT ALL MOTOR CAPACITORS HAVE DISCHARGED STORED VOLTAGE. UNITS WITH VARIABLE SPEED DRIVE, REFER TO DRIVE INSTRUCTIONS FOR CAPACITOR DISCHARGE.

FAILURE TO DO THE ABOVE BEFORE SERVICING COULD RESULT IN DEATH OR SERIOUS INJURY.

⚠ AVERTISSEMENT

TENSION DANGEREUSE!

COUPER TOUTES LES TENSIONS ET OUVRIR LES SECTIONNEURS À DISTANCE. PUIS SUIVRE LES PROCÉDURES DE VERROUILLAGE ET DES ÉTIQUETTES AVANT TOUTE INTERVENTION. VÉRIFIER QUE TOUS LES CONDENSATEURS DES MOTEURS SONT DÉCHARGÉS. DANS LE CAS D'UNITÉS COMPORTANT DES ENTRAÎNEMENTS À VITESSE VARAIBLE, SE REPORTER AUX INSTRUCTIONS DE L'ENTRAÎNEMENT POUR DÉCHARGER LES CONDENSATEURS.

NE PAS RESPECTER CES MESURES DE PRÉCAUTION PEUT ENTRAÎNER DES BLESSURES GRAVES POUVANT ÊTRE MORTELLES.

⚠ ADVERTENCIA

¡VOLTAJE PELIGROSO!

DESCONECTE TODA LA ENERGÍA ELÉCTRICA, INCLUSO LAS DESCONEXIONES REMOTAS Y SIGA LOS PROCEDIMIENTOS DE CIERRE Y ETIQUETADO ANTES DE PROCEDER AL SERVICIO. ASEGÚRESE DE QUE TODOS LOS CAPACITORES DEL MOTOR HAYAN DESCARGADO EL VOLTAJE ALMACENADO. PARA LAS UNIDADES CON EJE DE DIRECCIÓN DE VELOCIDAD VARIABLE, CONSULTE LAS INSTRUCCIONES PARA LA DESCARGA DEL CONDENSADOR.

EL NO REALIZAR LO ANTERIORMENTE INDICADO, PODRÍA OCASIONAR LA MUERTE O SERIAS LESIONES PERSONALES.

IMPORTANT

DO NOT ENERGIZE UNIT UNTIL CHECK-OUT AND START-UP PROCEDURE HAS BEEN COMPLETED.

CAUTION

USE COPPER CONDUCTORS ONLY!

UNIT TERMINALS ARE NOT DESIGNED TO ACCEPT OTHER TYPES OF CONDUCTORS.

FAILURE TO DO SO MAY CAUSE DAMAGE TO THE EQUIPMENT.

ATTENTION

N'UTILISER QUE DES CONDUCTEURS EN CUIVRE!

LES BORNES DE L'UNITÉ NE SONT PAS CONÇUES POUR RECEVOIR D'AUTRES TYPES DE CONDUCTEURS.

L'UTILISATION DE TOUT AUTRE CONDUCTEUR PEUT ENDOMMAGER L'ÉQUIPEMENT.

PRECAUCIÓN

¡UTILICE ÚNICAMENTE CONDUCTORES DE COBRE!

LAS TERMINALES DE LA UNIDAD NO ESTÁN DISEÑADAS PARA ACEPTAR OTROS TIPOS DE CONDUCTORES.

SI NO LO HACE, PUEDE OCASIONAR DAÑO AL EQUIPO.

TRANE
THIS DRAWING IS PROPRIETARY AND SHALL NOT BE COPIED OR ITS CONTENTS DISCLOSED TO OUTSIDE PARTIES WITHOUT THE WRITTEN CONSENT OF TRANE
© TRANE

DRAWN BY: N. CHALITA
DATE: 12/13/2016
DO NOT SCALE PRINT
THIRD ANGLE PROJECTION

POWER DIAGRAM
TSC120F(3,4)
THC(074-102)F(3,4)
RELIATEL CONTROL

12132278

SHEET 1 OF 1
REV B