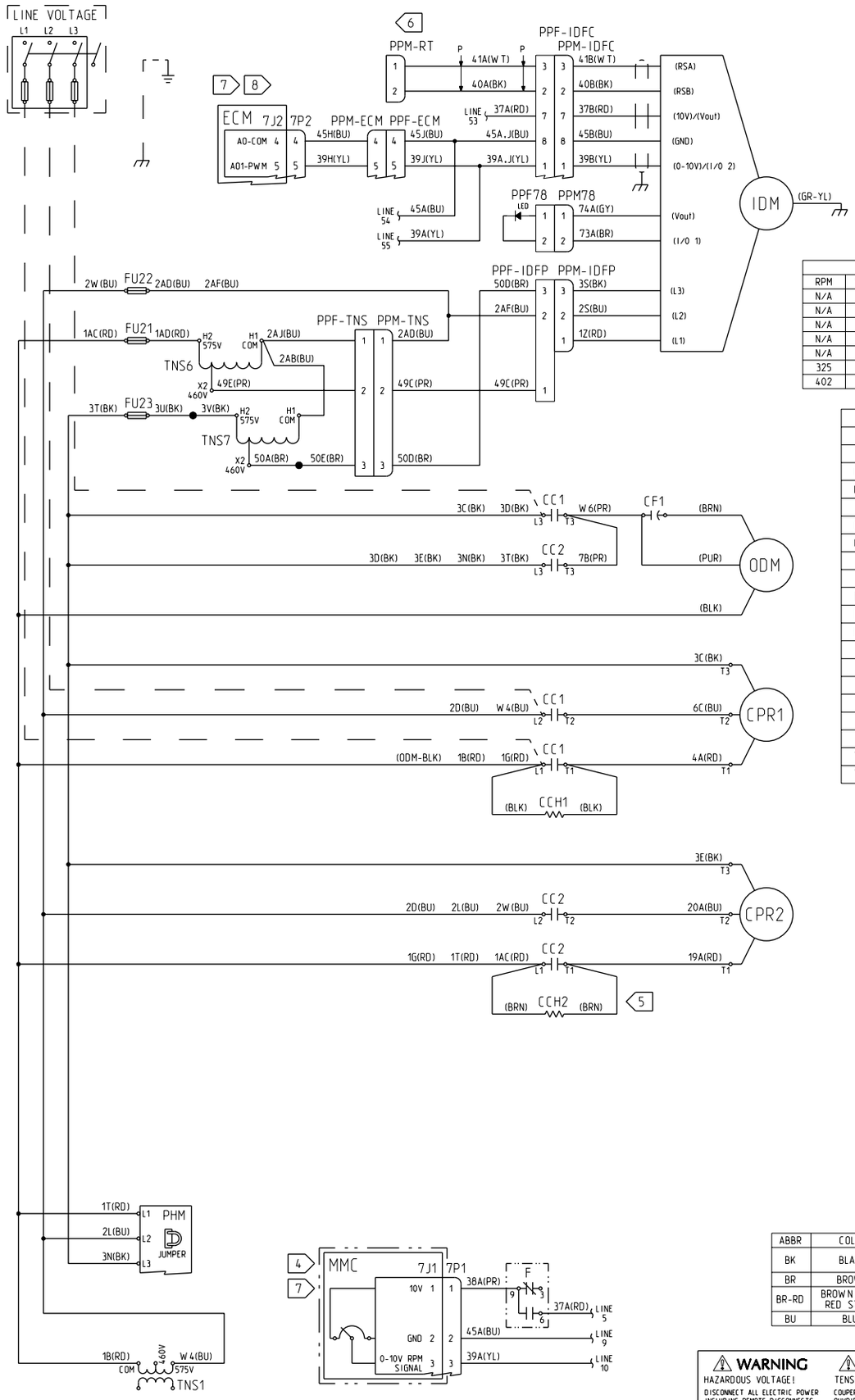

IDM RPM INDICATION							
RPM	VOLT	RPM	VOLT	RPM	VOLT	RPM	VOLT
N/A	1.00	465	2.75	976	4.50	1425	6.25
N/A	1.25	544	3.00	1044	4.75	1475	6.50
N/A	1.50	630	3.25	1115	5.00	1533	6.75
N/A	1.75	716	3.50	1203	5.25	1581	7.00
N/A	2.00	775	3.75	1253	5.50	1615	7.25
325	2.25	845	4.00	1312	5.75	1615	7.50
402	2.50	912	4.25	1368	6.00		

REF	DESCRIPTION	LINE
CC1	COMPRESSOR CONT 1	21,29,31
CC2	COMPRESSOR CONT 2	23,37,39
CCH1	CRANKCASE HTR 1	33
CCH2	CRANKCASE HTR 2	41
CF1	OD FAN CAPACITOR	21
CPR1	COMPRESSOR 1	29
CPR2	COMPRESSOR 2	37
ECM	ECM ENGINE BOARD	6
F	FAN RELAY	52
FU21	TNS6 & TNS7 FUSE	14
FU22	TNS6 & TNS7 FUSE	12
FU23	TNS6 & TNS7 FUSE	17
IDM	ID FAN MOTOR	8
LED	LIGHT EMITTING DIODE	9
MMC	IDM MANUAL CNTL MODULE	52
ODM	OD FAN MOTOR	23
PHM	PHASE MONITOR	49
TNS1	LOW-VOLT TRANSFORMER	55
TNS6	IDM & ODM TRANSFORMER	15
TNS7	IDM & ODM TRANSFORMER	18

ABBR	COLOR	ABBR	COLOR	ABBR	COLOR
BK	BLACK	GR-YL	GREEN WITH YELLOW STRIPE	WT	WHITE
BR	BROWN	OR	ORANGE	YL	YELLOW
BR-RD	BROWN WITH RED STRIPE	PR	PURPLE		
BU	BLUE	RD	RED		

⚠ WARNING

HAZARDOUS VOLTAGE!

DISCONNECT ALL ELECTRIC POWER INCLUDING REMOTE DISCONNECTS AND FOLLOW LOCK OUT AND TAG PROCEDURES BEFORE SERVICING. INSURE THAT ALL MOTOR CAPACITORS HAVE DISCHARGED STORED VOLTAGE. UNITS WITH VARIABLE SPEED DRIVE. REFER TO DRIVE INSTRUCTIONS FOR CAPACITOR DISCHARGE.

FAILURE TO DO THE ABOVE BEFORE SERVICING COULD RESULT IN DEATH OR SERIOUS INJURY.

⚠ AVERTISSEMENT

TENSION DANGEREUSE!

COUPER TOUTES LES TENSIONS ET OUVRIR LES SECTIONNEURS À DISTANCE. PUIS SUIVRE LES PROCÉDURES DE VERROUILLAGE ET DES ÉTIQUETTES AVANT TOUTE INTERVENTION. VÉRIFIER QUE TOUS LES CONDENSATEURS DES MOTEURS SONT DÉCHARGÉS. DANS LE CAS D'UNITÉS COMPORTANT DES ENTRAÎNEMENTS À VITESSE VARIABLE, SE REPORTER AUX INSTRUCTIONS DE L'ENTRAÎNEMENT POUR DÉCHARGER LES CONDENSATEURS.

NE PAS RESPECTER CES MESURES DE PRÉCAUTION PEUT ENTRAÎNER DES BLESSURES GRAVES POUVANT ÊTRE MORTELLES.

⚠ ADVERTENCIA

¡VOLTAJE PELIGROSO!

DESCONECTE TODA LA ENERGÍA ELÉCTRICA, INCLUSO LAS DESCONEXIONES REMOTAS Y SIGA LOS PROCEDIMIENTOS DE CIERRE Y ETIQUETADO ANTES DE PROCEDER AL SERVICIO. ASEGÚRESE DE QUE TODOS LOS CAPACITORES DEL MOTOR HAYAN DESCARGADO EL VOLTAJE ALMACENADO. PARA LAS UNIDADES CON EJE DE DIRECCIÓN DE VELOCIDAD VARIABLE, CONSULTE LAS INSTRUCCIONES PARA LA DESCARGA DEL CONDENSADOR.

EL NO REALIZAR LO ANTERIORMENTE INDICADO, PODRÍA OCASIONAR LA MUERTE O SERIAS LESIONES PERSONALES.

NOTES:

1. UNLESS OTHERWISE NOTED, ALL SWITCHES ARE SHOWN AT 25°C (77°F), AT ATMOSPHERIC PRESSURE, AT 50% RELATIVE HUMIDITY WITH ALL UTILITIES TURNED OFF AND AFTER A NORMAL SHUTDOWN HAS OCCURED.
2. DASHED LINES INDICATE RECOMMENDED FIELD WIRING BY OTHERS. DASHED LINE ENCLOSURES AND/OR DASHED DEVICE OUTLINES INDICATE COMPONENETS PROVIDED BY THE FIELD. PHANTOM LINE ENCLOSURES INDICATE ALTERNATE CIRCUITRY OR AVAILABLE SALES OPTIONS.
3. THREE-PHASE MOTORS ARE PROTECTED UNDER PRIMARY SINGLE PHASING CONDITIONS. ALL MOTORS HAVE INTERNAL OVERLOAD PROTECTION AND COMPRESSORS HAVE INTERNAL THERMAL PROTECTION.

4 RPM INDICATION 0-10VDC ACROSS VT AND COM. SEE IDM RPM INDICATION TABLE.

5 CCH2 LEADS ARE BLACK WITH BROWN TAPE WRAPPED AROUND THE END OF EACH LEAD.

6 PLUG PPM-RT IS NOT CONNECTED TO ANYTHING. IT IS ONLY USED FOR FACTORY RUNTEST HOOKUP.

7 IF ECM BOARD CONTROLS ARE USED THEN MMC CONNECTIONS ARE NOT MADE AND VICE VERSA. BOTH SETUPS ARE POSSIBLE AND DEPEND ON BOARD AVAILABILITY.

8 TO INCREASE/DECREASE VOLTAGE/RPMS (SEE IDM RPM INDICATION TABLE):
A. PUSH AND HOLD THE SET BUTTON FOR 3 SEC. BOARD WILL DISPLAY MOTOR 1 PARAMETER NAME: HI 1.
B. SLOW PUSH SET AGAIN TO DISPLAY THE PARAMETER'S CURRENT VALUE = 7.50 VOLTS.
C. PUSH ON + OR - BUTTON TO ADJUST PARAMETER TO DESIRED VALUE = XXX VOLTS.
D. PUSH AND HOLD SET BUTTON FOR 3 SEC TO "SAVE" THE VALUE. AFTER SAVE IS COMPLETE, HI 1 WILL SHOW AGAIN.
E. AFTER THE VOLTAGE HI 1 IS SUCCESSFULLY CHANGED, THE DISPLAY SEQUENCE WILL BE:
MTR 1 --> XXX --> MTR2 --> 0.00 --> FST1 --> ON --> FST2 --> ON/OFF --> EnEn --> ON/OFF
AND THE MOTOR WILL RAMP UP OR DOWN TO ADJUST TO THE INPUT SIGNAL.

IMPORTANT

DO NOT ENERGIZE UNIT UNTIL CHECK-OUT AND START-UP PROCEDURE HAS BEEN COMPLETED.

CAUTION

USE COPPER CONDUCTORS ONLY!

UNIT TERMINALS ARE NOT DESIGNED TO ACCEPT OTHER TYPES OF CONDUCTORS.

FAILURE TO DO SO MAY CAUSE DAMAGE TO THE EQUIPMENT.

ATTENTION

N'UTILISER QUE DES CONDUCTEURS EN CUIVRE!

LES BORNES DE L'UNITÉ NE SONT PAS CONÇUES POUR RECEVOIR D'AUTRES TYPES DE CONDUCTEURS.

L'UTILISATION DE TOUT AUTRE CONDUCTEUR PEUT ENDOMMAGER L'ÉQUIPEMENT.

PRECAUCIÓN

¡UTILICE ÚNICAMENTE CONDUCTORES DE COBRE!

LAS TERMINALES DE LA UNIDAD NO ESTÁN DISEÑADAS PARA ACEPTAR OTROS TIPOS DE CONDUCTORES.

SI NO LO HACE, PUEDE OCASIONAR DAÑO AL EQUIPO.

DO NOT SCALE PRINT

DRAWN BY: N. CHALITA

DATE: 12/12/2016

THIS DRAWING IS PROPRIETARY TO TRANE AND CONTAINS DISCLOSURES TO OUTSIDERS OR COPIES OF TRANE WITHOUT PRIOR WRITTEN CONSENT OF TRANE
© TRANE

TRANE TECHNOLOGIES PROTECTION

POWER DIAGRAM
TSC120FW
ELECTROMECHANICAL CONTROLS

12132274

SHEET 1 OF 1

REV B