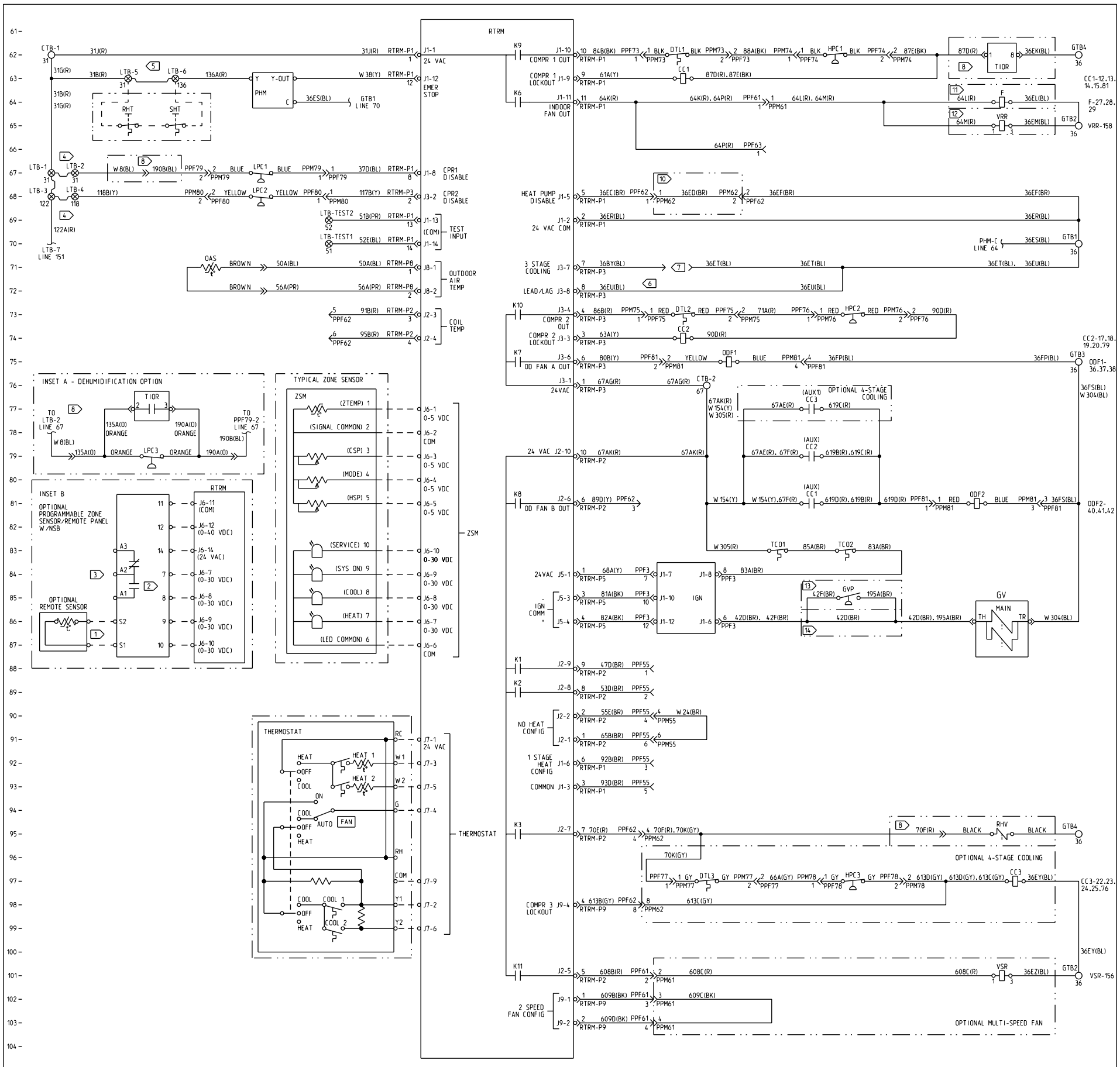

LEGEND		
DEVICE DESIG	DESCRIPTION	LINE NUMBER
CC1	CONTACTOR - COMPRESSOR	63.81
CC2	CONTACTOR - COMPRESSOR	74.79
CC3	CONTACTOR - COMPRESSOR	77.97
DTL1	SWITCH - DISCHARGE TEMP LIMIT	62
DTL2	SWITCH - DISCHARGE TEMP LIMIT	73
DTL3	SWITCH - DISCHARGE TEMP LIMIT	97
F	CONTACTOR - INDOOR FAN	64
FI	RELAY - FAN INTERLOCK	66.88.89
GV	VALVE - GAS	86
GVP	SWITCH - GAS VALVE PRESSURE	85
HPC1	SWITCH - HIGH PRESSURE	62
HPC2	SWITCH - HIGH PRESSURE	73
HPC3	SWITCH - HIGH PRESSURE	97
IGN	MODULE - GAS IGNITION	84
LPC1	SWITCH - LOW PRESSURE	67
LPC2	SWITCH - LOW PRESSURE	68
LPC3	SWITCH - LOW PRESSURE	79
OAS	SENSOR - OUTDOOR AIR TEMP	71
ODF1	CONTACTOR - OUTDOOR FAN	75
ODF2	CONTACTOR - OUTDOOR FAN	81
PHM	MODULE - PHASE MONITOR	63
RHT	SWITCH - RETURN HIGH TEMPERATURE	65
RHV	VAVLE - REHEAT	95
RTRM	MODULE - RELIATEL REGRIGERATION	61
SHT	SWITCH - SUPPLY HIGH TEMPERATURE	65
TCO1	SWITCH - THERMAL CUTOUT	83
TCO2	SWITCH - THERMAL CUTOUT	83
TIOR	MODULE - TIMED OVERRIDE	62.77
VRR	RELAY - VFD RUN	65
VSR	RELAY - VFD SPEED	101
ZSM	MODULE - ZONE SENSOR	77

1. INSTALL OPTIONAL REMOTE SENSOR TO TERMINALS S1 AND S2 WHEN REQUIRED. SEE PROGRAMMABLE ZONE SENSOR/REMOTE PANEL WITH NSB LITERATURE FOR OPTIONAL CONFIGURATION.
2. TERMINALS 7, 8, 9, AND 10 ARE FOR OPTIONAL INDICATORS.
3. AUXILIARY RELAY ENERGIZED DURING OCCUPIED PERIODS.
4. TO DISABLE COMPRESSORS, REMOVE JUMPERS BETWEEN LTB-1 AND LTB-2 AND BETWEEN LTB-3 AND LTB-4 AND CONNECT FIELD SUPPLIED CONTROL DEVICE.
5. TO SHUT DOWN THE UNIT FOR EMERGENCY STOP, REMOVE JUMPER BETWEEN LTB-5 AND LTB-6 AND INSTALL FIELD SUPPLIED DEVICE.
6. TO ENABLE COMPRESSOR LEAD/LAG OPERATION CUT WIRE 36EU(BL).
7. CONNECT WIRES 36BY(BL) AND 36ET(BL) TO ENABLE 3 STAGE COOLING.
8. WHEN OPTIONAL DEHUMIDIFICATION IS REQUIRED, CONNECT TIOR AS SHOWN IN INSET A. CONNECT REHEAT VALVE (RHV) AS SHOWN.
10. TO ENABLE REHEAT OR 4 STAGE COOLING REMOVE WIRE 36ED(BR).
11. FAN CONTACTOR AND ASSOCIATED WIRING IS ONLY PRESENT WHEN THE OPTIONAL CONSTANT VOLUME SUPPLY FAN IS INSTALLED.
12. THE VFD RUN RELAY AND ASSOCIATED WIRING IS ONLY PRESENT WHEN THE OPTIONAL SUPPLY FAN WITH VARIABLE FREQUENCY DRIVE IS INSTALLED.
13. GAS VALVE PRESSURE SWITCH AND ASSOCIATED WIRING IS ONLY PRESENT WITH MODULATING GAS HEAT.
14. WIRE 42D(BR) IS INSTALLED ONLY WITH 2-STAGE GAS HEAT.

TRANE

THIS DRAWING IS PROPRIETARY AND SHALL NOT BE COPIED OR ITS CONTENTS DISCLOSED TO OUTSIDE PARTIES WITHOUT THE CONSENT OF TRANE.

DRAWN BY: R. CERVANTES
TRANE® DATE: 29-JUN-2016
REPLACES: --
REVISION DATE: 22-SEPT-2016
CAD SYSTEM USED: Pro/DIAGRAM
SIMILAR TO: --

CONTROL SCHEMATIC
RELIATEL REFRIGERATION
GAS HEAT - SK SCCR

VOYAGER 2
DIAGRAM

FILE NUMBER: 12132116
DRAWING NUMBER: 12132119
SHEET: 1 OF 1
REV: B