RELEASED 09/Oct/2015 13:26:14 GMT

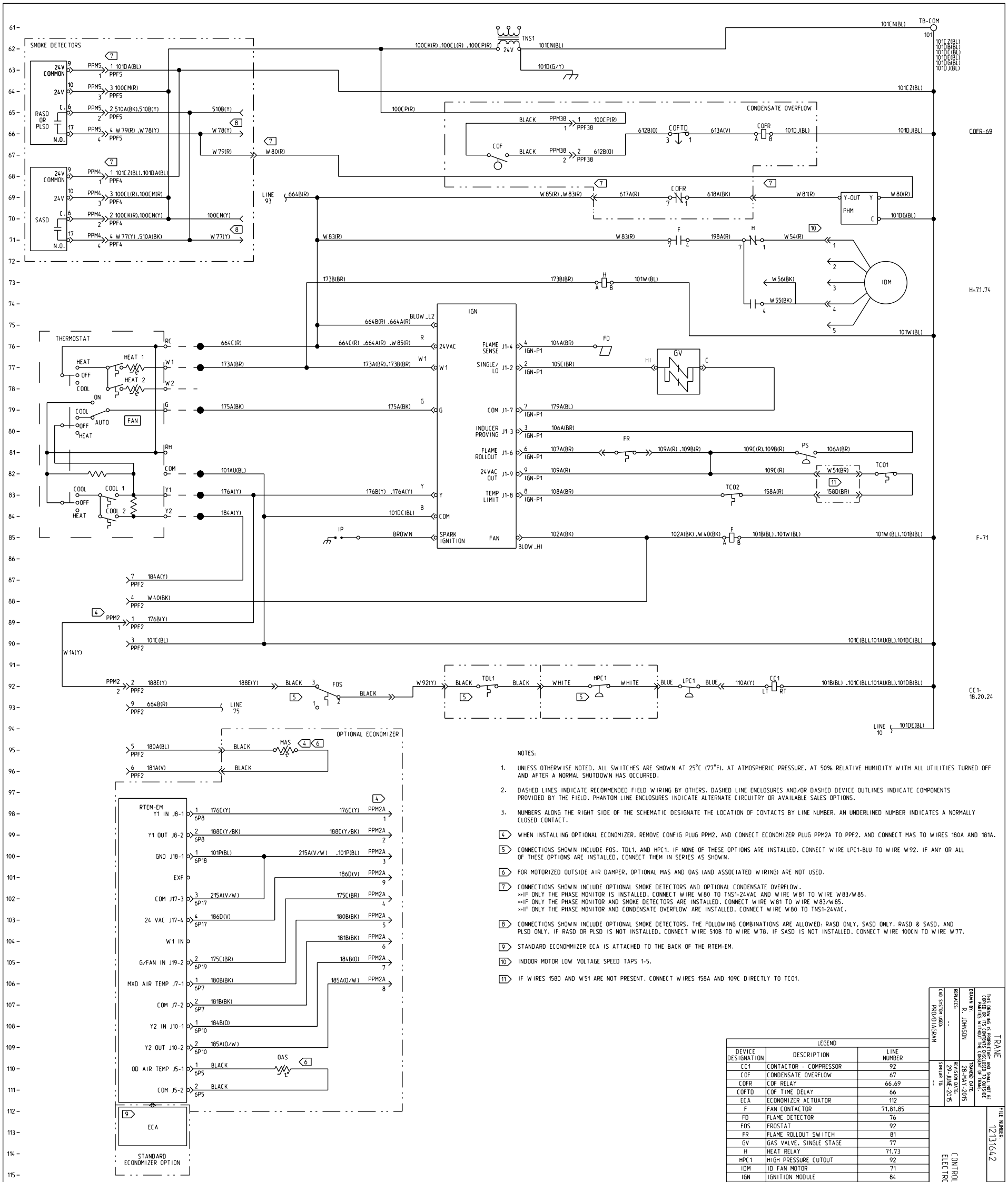

NOTES:

1. UNLESS OTHERWISE NOTED, ALL SWITCHES ARE SHOWN AT 25°C (77°F), AT ATMOSPHERIC PRESSURE, AT 50% RELATIVE HUMIDITY WITH ALL UTILITIES TURNED OFF AND AFTER A NORMAL SHUTDOWN HAS OCCURRED.
2. DASHED LINES INDICATE RECOMMENDED FIELD WIRING BY OTHERS. DASHED LINE ENCLOSURES AND/OR DASHED DEVICE OUTLINES INDICATE COMPONENTS PROVIDED BY THE FIELD. PHANTOM LINE ENCLOSURES INDICATE ALTERNATE CIRCUITRY OR AVAILABLE SALES OPTIONS.
3. NUMBERS ALONG THE RIGHT SIDE OF THE SCHEMATIC DESIGNATE THE LOCATION OF CONTACTS BY LINE NUMBER. AN UNDERLINED NUMBER INDICATES A NORMALLY CLOSED CONTACT.

4 WHEN INSTALLING OPTIONAL ECONOMIZER, REMOVE CONFIG PLUG PPM2, AND CONNECT ECONOMIZER PLUG PPM2A TO PPF2, AND CONNECT MAS TO WIRES 180A AND 181A.

5 CONNECTIONS SHOWN INCLUDE FOS, TDL1, AND HPC1. IF NONE OF THESE OPTIONS ARE INSTALLED, CONNECT WIRE LPC1-BLU TO WIRE W92. IF ANY OR ALL OF THESE OPTIONS ARE INSTALLED, CONNECT THEM IN SERIES AS SHOWN.

6 FOR MOTORIZED OUTSIDE AIR DAMPER, OPTIONAL MAS AND OAS (AND ASSOCIATED WIRING) ARE NOT USED.

7 CONNECTIONS SHOWN INCLUDE OPTIONAL SMOKE DETECTORS AND OPTIONAL CONDENSATE OVERFLOW.
>>IF ONLY THE PHASE MONITOR IS INSTALLED, CONNECT WIRE W80 TO TNS1-24VAC AND WIRE W81 TO WIRE W83/W85.
>>IF ONLY THE PHASE MONITOR AND SMOKE DETECTORS ARE INSTALLED, CONNECT WIRE W81 TO WIRE W83/W85.
>>IF ONLY THE PHASE MONITOR AND CONDENSATE OVERFLOW ARE INSTALLED, CONNECT WIRE W80 TO TNS1-24VAC.

8 CONNECTIONS SHOWN INCLUDE OPTIONAL SMOKE DETECTORS. THE FOLLOWING COMBINATIONS ARE ALLOWED: RASD ONLY, SASD ONLY, RASD & SASD, AND PLSD ONLY. IF RASD OR PLSD IS NOT INSTALLED, CONNECT WIRE 510B TO WIRE W78. IF SASD IS NOT INSTALLED, CONNECT WIRE 100CN TO WIRE W77.

9 STANDARD ECONOMMIZER ECA IS ATTACHED TO THE BACK OF THE RTEM-EM.

10 INDOOR MOTOR LOW VOLTAGE SPEED TAPS 1-5.

11 IF WIRES 158D AND W51 ARE NOT PRESENT, CONNECT WIRES 158A AND 109C DIRECTLY TO TC01.

LEGEND

DEVICE DESIGNATION	DESCRIPTION	LINE NUMBER
CC1	CONTACTOR - COMPRESSOR	92
COF	CONDENSATE OVERFLOW	67
COFR	COF RELAY	66.69
COFTD	COF TIME DELAY	66
ECA	ECONOMIZER ACTUATOR	112
F	FAN CONTACTOR	71.81.85
FD	FLAME DETECTOR	76
FOS	FROSTAT	92
FR	FLAME ROLLOUT SWITCH	81
GV	GAS VALVE, SINGLE STAGE	77
H	HEAT RELAY	71.73
HPC1	HIGH PRESSURE CUTOUT	92
IDM	ID FAN MOTOR	71
IGN	IGNITION MODULE	84
IP	IGNITER	85
LPC1	SWITCH - LOW PRESSURE	92
MAS	MIXED AIR SENSOR	95
OAS	OD AIR SENSOR	110
PHM	MODULE - PHASE MONITOR	69
PLSD	PLENUM SMOKE DETECTOR	63
PS	PRESSURE SWITCH	81
RASD	RTN AIR SMOKE DETECTOR	63
RTEM-EM	ECONOMIZER MODULE - EM	98
SASD	SUPPLY AIR SMOKE DETECT	68
TC01	TEMP LIMIT 1	82
TC02	TEMP LIMIT 2	83
TDL1	THERMOSTAT DISCHARGE LIMIT	92
TNS1	TRANSFORMER - 24V CONTROLS	61

THIS DRAWING IS PROPRIETARY AND SHALL NOT BE COPIED OR ITS CONTENTS DISCLOSED TO OUTSIDE PARTIES WITHOUT THE CONSENT OF TRANE.

TRANE

DRAWN BY: R. JOHNSON
REPLACES: --
TRANE® DATE: 28-MAY-2015
REVISION DATE: 29-JUNE-2015
CAD SYSTEM USED: PRO/DIAGRAM
SIMILAR TO: --

CONTROL, GAS HEAT, 3-5 TON
ELECTROMECHANICAL CONTROL

PRECEDENT DIAGRAM

FILE NUMBER: 12131642
DRAWING NUMBER: 12131644
SHEET: 1 OF 1
REV: B