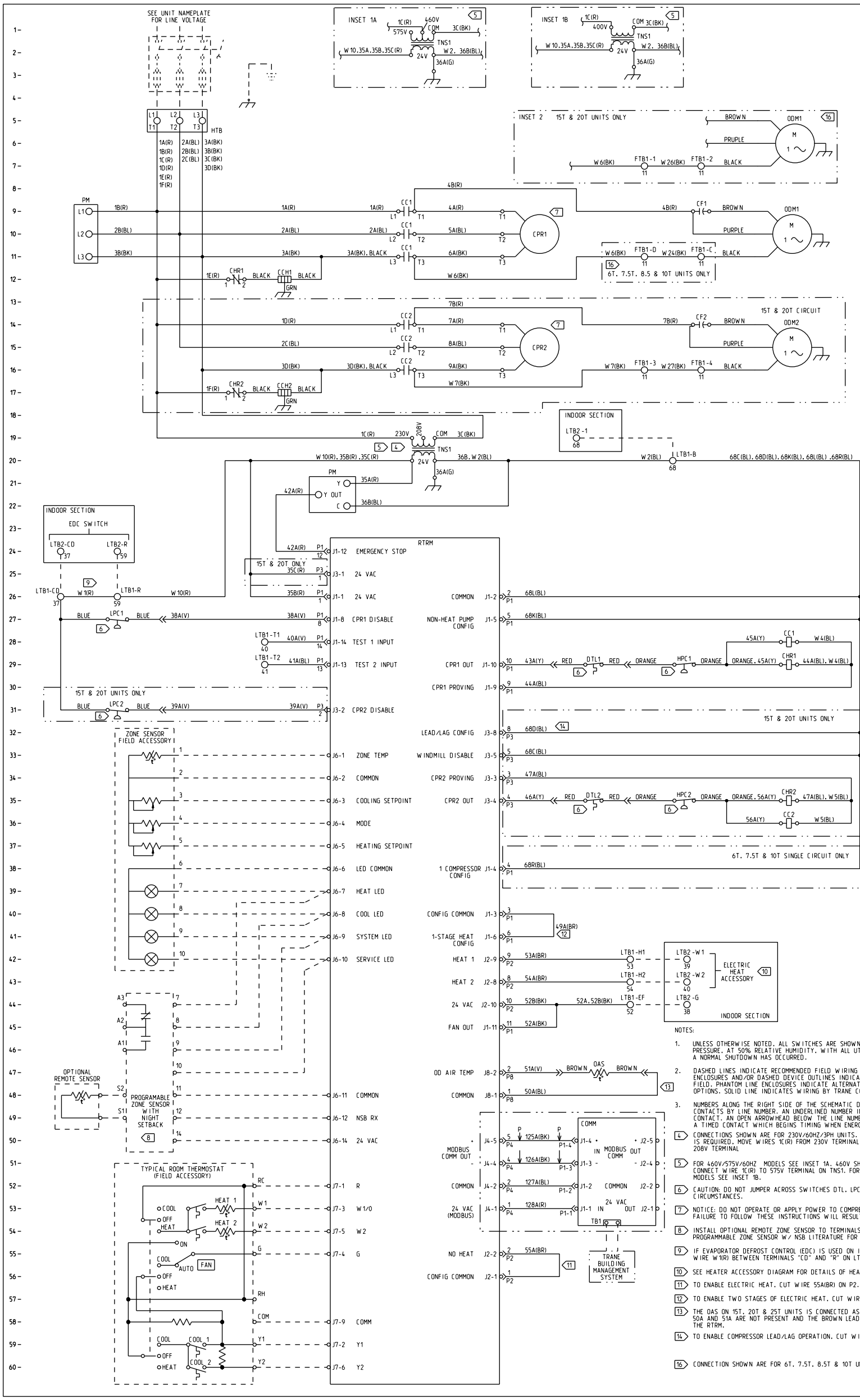


| LEGEND | | |
|---|---|---|
| DEVICE | DESCRIPTION | LINE |
| CC1 | COMPRESSOR CONTACTOR | 9.10.11.28 |
| CC2 | COMPRESSOR CONTACTOR | 14.15.16.36 |
| CCH1 | CRANKCASE HEATER | 12 |
| CCH2 | CRANKCASE HEATER | 17 |
| CF1 | OUTDOOR FAN CAPACITOR | 9 |
| CF2 | OUTDOOR FAN CAPACITOR | 14 |
| CHR1 | CRANKCASE HEATER RELAY | 12.23.29 |
| CHR2 | CRANKCASE HEATER RELAY | 17.22.35 |
| COMM | COMMUNICATION INTERFACE MODULE | 50 |
| CPR1 | COMPRESSOR | 10 |
| CPR2 | COMPRESSOR | 15 |
| DTL1 | DISCHARGE TEMPERATURE LIMIT | 29 |
| DTL2 | DISCHARGE TEMPERATURE LIMIT | 35 |
| HPC1 | HIGH PRESSURE CUTOUT | 29 |
| HPC2 | HIGH PRESSURE CUTOUT | 35 |
| HTB | HIGH VOLTAGE TERMINAL BLOCK | 5 |
| LPC1 | LOW PRESSURE CUT OUT | 27 |
| LPC2 | LOW PRESSURE CUTOUT | 31 |
| OAS | OUTDOOR AIR TEMP SENSOR | 47 |
| ODM1 | OUTDOOR FAN MOTOR | 5.9 |
| ODM2 | OUTDOOR FAN MOTOR | 14 |
| PM | PHASE MONITOR | 9.21 |
| RTRM | RELIATEL REFRIGERATION MODULE | 26 |
| TNS1 | TRANSFORMER - CONDENSER | 19 |

| WIRE COLOR DESIGNATION | | | |
|---|---|---|---|
| ABBR | COLOR | ABBR | COLOR |
| BL | BLUE | O | ORANGE |
| BK | BLACK | R | RED |
| BR | BROWN | V | VIOLET (PURPLE) |
| G | GREEN | W | WHITE |
| GY | GRAY (SLATE) | Y | YELLOW |

## ⚠ WARNING

HAZARDOUS VOLTAGE!

DISCONNECT ALL ELECTRIC POWER INCLUDING REMOTE DISCONNECTS AND FOLLOW LOCK OUT AND TAG PROCEDURES BEFORE SERVICING. INSURE THAT ALL MOTOR CAPACITORS HAVE DISCHARGED STORED VOLTAGE. UNITS WITH VARIABLE SPEED DRIVE. REFER TO DRIVE INSTRUCTIONS FOR CAPACITOR DISCHARGE.

FAILURE TO DO THE ABOVE BEFORE SERVICING COULD RESULT IN DEATH OR SERIOUS INJURY.

## ⚠ AVERTISSEMENT

TENSION DANGEREUSE!

COUPER TOUTES LES TENSIONS ET OUVRIR LES SECTIONNEURS À DISTANCE. PUIS SUIVRE LES PROCÉDURES DE VERROUILLAGE ET DES ÉTIQUETTES AVANT TOUTE INTERVENTION. VÉRIFIER QUE TOUS LES CONDENSATEURS DES MOTEURS SONT DÉCHARGÉS. DANS LE CAS D'UNITÉS COMPORTANT DES ENTRAÎNEMENTS À VITESSE VARAIBLE, SE REPORTER AUX INSTRUCTIONS DE L'ENTRAÎNEMENT POUR DÉCHARGER LES CONDENSATEURS.

NE PAS RESPECTER CES MESURES DE PRÉCAUTION PEUT ENTRAÎNER DES BLESSURES GRAVES POUVANT ÊTRE MORTELLES.

## ⚠ ADVERTENCIA

¡VOLTAJE PELIGROSO!

DESCONECTE TODA LA ENERGÍA ELÉCTRICA, INCLUSO LAS DESCONEXIONES REMOTAS Y SIGA LOS PROCEDIMIENTOS DE CIERRE Y ETIQUETADO ANTES DE PROCEDER AL SERVICIO. ASEGÚRESE DE QUE TODOS LOS CAPACITORES DEL MOTOR HAYAN DESCARGADO EL VOLTAJE ALMACENADO. PARA LAS UNIDADES CON EJE DE DIRECCIÓN DE VELOCIDAD VARIABLE, CONSULTE LAS INSTRUCCIONES PARA LA DESCARGA DEL CONDENSADOR.

EL NO REALIZAR LO ANTERIORMENTE INDICADO, PODRÍA OCASIONAR LA MUERTE O SERIAS LESIONES PERSONALES.

## CAUTION

USE COPPER CONDUCTORS ONLY!

UNIT TERMINALS ARE NOT DESIGNED TO ACCEPT OTHER TYPES OF CONDUCTORS.

FAILURE TO DO SO MAY CAUSE DAMAGE TO THE EQUIPMENT.

## ATTENTION

N'UTILISER QUE DES CONDUCTEURS EN CUIVRE!

LES BORNES DE L'UNITÉ NE SONT PAS CONÇUES POUR RECEVOIR D'AUTRES TYPES DE CONDUCTEURS.

L'UTILISATION DE TOUT AUTRE CONDUCTEUR PEUT ENDOMMAGER L'ÉQUIPEMENT.

## PRECAUCIÓN

¡UTILICE ÚNICAMENTE CONDUCTORES DE COBRE!

LAS TERMINALES DE LA UNIDAD NO ESTÁN DISEÑADAS PARA ACEPTAR OTROS TIPOS DE CONDUCTORES.

SI NO LO HACE, PUEDE OCASIONAR DAÑO AL EQUIPO.

NOTES:

1. UNLESS OTHERWISE NOTED, ALL SWITCHES ARE SHOWN AT 25°C (77°F), AT ATMOSPHERIC PRESSURE, AT 50% RELATIVE HUMIDITY, WITH ALL UTILITIES TURNED OFF, AND AFTER A NORMAL SHUTDOWN HAS OCCURRED.
2. DASHED LINES INDICATE RECOMMENDED FIELD WIRING BY OTHERS. DASHED LINE ENCLOSURES AND/OR DASHED DEVICE OUTLINES INDICATE COMPONENTS PROVIDED BY THE FIELD. PHANTOM LINE ENCLOSURES INDICATE ALTERNATE CIRCUITRY OR AVAILABLE SALES OPTIONS. SOLID LINE INDICATES WIRING BY TRANE CO.
3. NUMBERS ALONG THE RIGHT SIDE OF THE SCHEMATIC DESIGNATE THE LOCATION OF CONTACTS BY LINE NUMBER. AN UNDERLINED NUMBER INDICATES A NORMALLY CLOSED CONTACT. AN OPEN ARROWHEAD BELOW THE LINE NUMBER POINTING UPWARD INDICATES A TIMED CONTACT WHICH BEGINS TIMING WHEN ENERGIZED.

4. CONNECTIONS SHOWN ARE FOR 230V/60HZ/3PH UNITS. WHEN 208V/60HZ/3PH OPERATION IS REQUIRED, MOVE WIRES 1C(R) FROM 230V TERMINAL ON UNIT TRANSFORMERS (TNS1) TO 208V TERMINAL
5. FOR 460V/575V/60HZ MODELS SEE INSET 1A. 460V SHOWN. FOR 575V MODELS CONNECT WIRE 1C(R) TO 575V TERMINAL ON TNS1. FOR 380V/60HZ OR 380V-415V/50HZ MODELS SEE INSET 1B.
6. CAUTION: DO NOT JUMPER ACROSS SWITCHES DTL, LPC, AND HPC UNDER ANY CIRCUMSTANCES.
7. NOTICE: DO NOT OPERATE OR APPLY POWER TO COMPRESSORS WHILE UNDER A VACUUM. FAILURE TO FOLLOW THESE INSTRUCTIONS WILL RESULT IN COMPRESSOR FAILURE.
8. INSTALL OPTIONAL REMOTE ZONE SENSOR TO TERMINALS S1 AND S2 WHEN REQUIRED. SEE PROGRAMMABLE ZONE SENSOR W/ NSB LITERATURE FOR OPTION CONFIGURATION.
9. IF EVAPORATOR DEFROST CONTROL (EDC) IS USED ON INDOOR UNIT, REMOVE JUMPER WIRE W1(R) BETWEEN TERMINALS "CO" AND "R" ON LTB1.
10. SEE HEATER ACCESSORY DIAGRAM FOR DETAILS OF HEATER WIRING.
11. TO ENABLE ELECTRIC HEAT, CUT WIRE 55A(BR) ON P2.
12. TO ENABLE TWO STAGES OF ELECTRIC HEAT, CUT WIRE 49A(BR) ON P1.
13. THE OAS ON 15T, 20T & 25T UNITS IS CONNECTED AS SHOWN. ON SMALLER UNITS, WIRES 50A AND 51A ARE NOT PRESENT AND THE BROWN LEADS ARE CONNECTED DIRECTLY TO THE RTRM.
14. TO ENABLE COMPRESSOR LEAD/LAG OPERATION, CUT WIRE 68D(BL).
16. CONNECTION SHOWN ARE FOR 6T, 7.5T, 8.5T & 10T UNITS. FOR ALL OTHER SEE INSET 2.

THIS DRAWING IS PROPRIETARY AND SHALL NOT BE COPIED OR ITS CONTENTS DISCLOSED TO OUTSIDE PARTIES WITHOUT THE CONSENT OF TRANE.

TRANE

DRAWN BY: D.MCCAULEY
TRANE® DATE: 31 OCT. 2014
REPLACES:
CAD SYSTEM USED: PRO/DIAGRAM
REVISION DATE: 07 JULY '15
SIMILAR TO:

FILE NUMBER: 12131505
DRAWING NUMBER: 12131506
SHEET: 1 OF 1
REV: D

ODYSSEY
SCHEMATIC

CONDENSER UNIT COOLING ONLY W/ RELIATEL 6T.7.5T.8.5T & 10T SINGLE (ALL VOLTAGES), 15T DUAL (ALL VOLTAGES) & 20T DUAL 380/460/575V/60HZ & 380/415V/50HZ