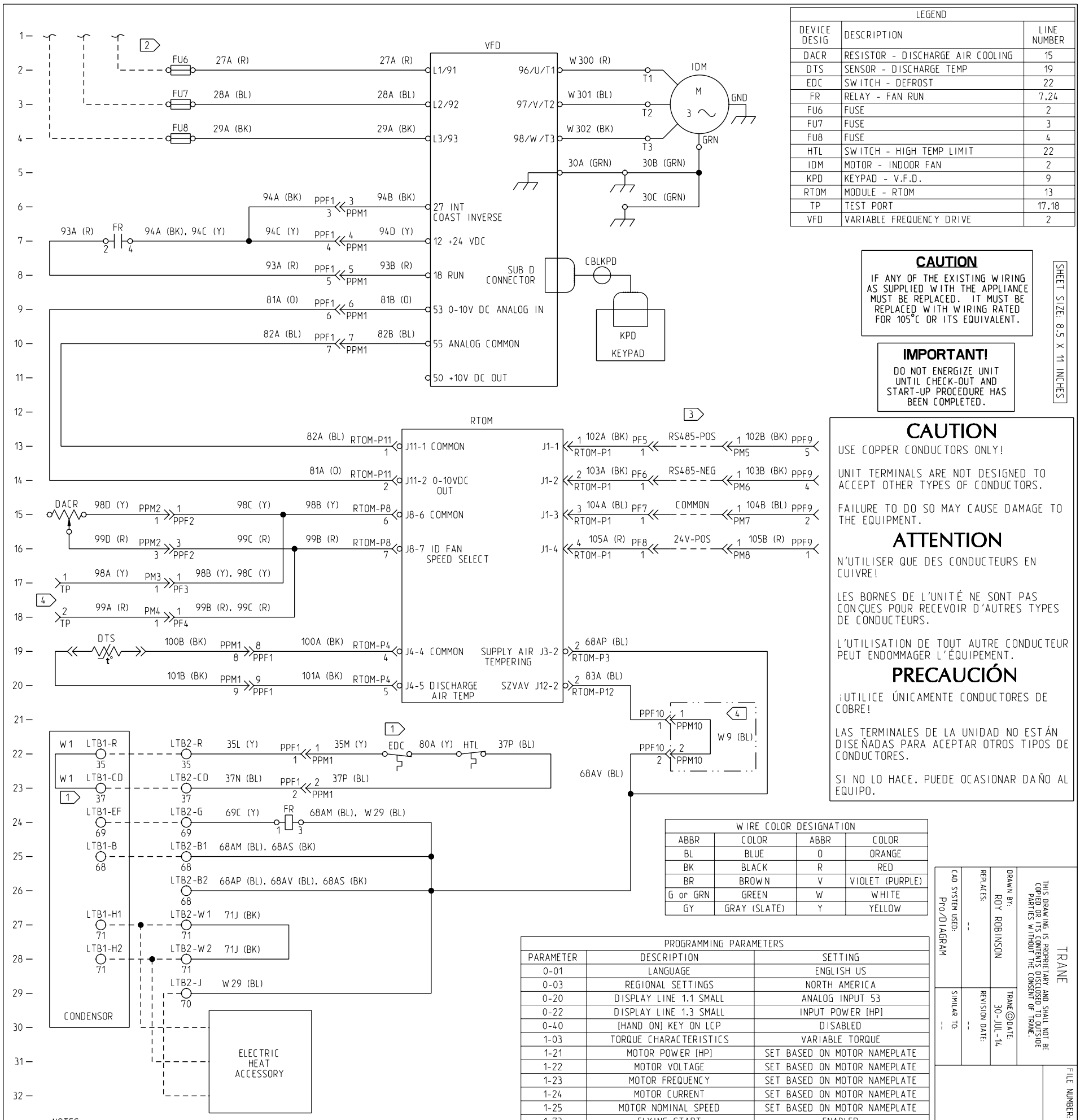

LEGEND		
DEVICE DESIG	DESCRIPTION	LINE NUMBER
DACR	RESISTOR - DISCHARGE AIR COOLING	15
DTS	SENSOR - DISCHARGE TEMP	19
EDC	SWITCH - DEFROST	22
FR	RELAY - FAN RUN	7,24
FU6	FUSE	2
FU7	FUSE	3
FU8	FUSE	4
HTL	SWITCH - HIGH TEMP LIMIT	22
IDM	MOTOR - INDOOR FAN	2
KPD	KEYPAD - V.F.D.	9
RTOM	MODULE - RTOM	13
TP	TEST PORT	17,18
VFD	VARIABLE FREQUENCY DRIVE	2

CAUTION

IF ANY OF THE EXISTING WIRING AS SUPPLIED WITH THE APPLIANCE MUST BE REPLACED. IT MUST BE REPLACED WITH WIRING RATED FOR 105°C OR ITS EQUIVALENT.

IMPORTANT!

DO NOT ENERGIZE UNIT UNTIL CHECK-OUT AND START-UP PROCEDURE HAS BEEN COMPLETED.

SHEET SIZE: 8.5 X 11 INCHES

CAUTION

USE COPPER CONDUCTORS ONLY!

UNIT TERMINALS ARE NOT DESIGNED TO ACCEPT OTHER TYPES OF CONDUCTORS.

FAILURE TO DO SO MAY CAUSE DAMAGE TO THE EQUIPMENT.

ATTENTION

N'UTILISER QUE DES CONDUCTEURS EN CUIVRE!

LES BORNES DE L'UNITÉ NE SONT PAS CONÇUES POUR RECEVOIR D'AUTRES TYPES DE CONDUCTEURS.

L'UTILISATION DE TOUT AUTRE CONDUCTEUR PEUT ENDOMMAGER L'ÉQUIPEMENT.

PRECAUCIÓN

¡UTILICE ÚNICAMENTE CONDUCTORES DE COBRE!

LAS TERMINALES DE LA UNIDAD NO ESTÁN DISEÑADAS PARA ACEPTAR OTROS TIPOS DE CONDUCTORES.

SI NO LO HACE, PUEDE OCASIONAR DAÑO AL EQUIPO.

NOTES:

1. REMOVE JUMPER W1 FROM CONDENSOR SECTION TO ENABLE EDC SWITCH.
2. SINGLE POINT POWER ENTRY CONNECTION POINTS WILL BE AT FUSE BLOCK. SEE CUSTOMER CONNECTIONS ON CONNECTION PRINT.
3. CUSTOMER TO CONNECT WIRES BETWEEN RELIATEL BOARDS IN CONDENSOR AND AIR HANDLER UNITS. CONDENSOR CONNECTOR (PPF9) WILL BE MADE AT RTRM-J4 OR COMMUNICATION BOARD-J2, IF INSTALLED.
4. SZVAV CONFIGURATION SHOWN. FOR 2 SPEED FAN OPERATION DISCONNECT PPM10 FROM PPF10 AND CONNECT PPM10 TO TP.

FUSE REPLACEMENT TABLE						
	MOTORS					
	UNIT VOLTAGE	FUSE RATING	2 HP	3 HP	5 HP	7.5 HP
VFD CIRCUIT FUSE FU6-FU8 (CLASS "J" FUSES)	208V/60/3	600V	20A	30A	50A	60A
	230V/60/3	600V	20A	30A	50A	60A
	460V/60/3	600V	10A	15A	20A	30A
	575V/60/3	600V	10A	10A	20A	25A

WIRE COLOR DESIGNATION			
ABBR	COLOR	ABBR	COLOR
BL	BLUE	O	ORANGE
BK	BLACK	R	RED
BR	BROWN	V	VIOLET (PURPLE)
G or GRN	GREEN	W	WHITE
GY	GRAY (SLATE)	Y	YELLOW

PROGRAMMING PARAMETERS		
PARAMETER	DESCRIPTION	SETTING
0-01	LANGUAGE	ENGLISH US
0-03	REGIONAL SETTINGS	NORTH AMERICA
0-20	DISPLAY LINE 1.1 SMALL	ANALOG INPUT 53
0-22	DISPLAY LINE 1.3 SMALL	INPUT POWER [HP]
0-40	[HAND ON] KEY ON LCP	DISABLED
1-03	TORQUE CHARACTERISTICS	VARIABLE TORQUE
1-21	MOTOR POWER [HP]	SET BASED ON MOTOR NAMEPLATE
1-22	MOTOR VOLTAGE	SET BASED ON MOTOR NAMEPLATE
1-23	MOTOR FREQUENCY	SET BASED ON MOTOR NAMEPLATE
1-24	MOTOR CURRENT	SET BASED ON MOTOR NAMEPLATE
1-25	MOTOR NOMINAL SPEED	SET BASED ON MOTOR NAMEPLATE
1-73	FLYING START	ENABLED
1-90	MOTOR THERMAL PROTECTION	NO PROTECTION
2-00	DC HOLD/PREHEAT CURRENT	0
2-01	DC BRAKE CURRENT	0
2-04	DC BRAKE CUT IN SPEED [HZ]	10
3-41	RAMP 1 RAMP-UP TIME	10
3-42	RAMP 1 RAMP-DOWN TIME	30
4-12	MOTOR SPEED LOW LIMIT [HZ]	25
4-16	TORQUE LIMIT MOTOR MODE	115%
4-18	CURRENT LIMIT	115% RATED CURRENT
5-12	TERMINAL 27 DIGITAL INPUT	COAST INVERSE
6-10	TERMINAL 53 LOW VOLTAGE	SEE IOM
6-11	TERMINAL 53 HIGH VOLTAGE	SEE IOM
6-14	TERMINAL 53 LOW REF	SEE IOM
14-01	SWITCHING FREQUENCY	8.0 KHZ
14-04	PWM RANDOM	ON
14-12	FUNCTION AT MAINS IMBALANCE	DERATE
14-20	RESET MODE	AUTOMATIC RESET X 3
14-60	FUNCTION AT OVER TEMPERATURE	DERATE
14-61	FUNCTION AT INVERTER OVERLOAD	DERATE

THIS DRAWING IS PROPRIETARY AND SHALL NOT BE COPIED OR ITS CONTENTS DISCLOSED TO OUTSIDE PARTIES WITHOUT THE CONSENT OF TRANE.

TRANE

DRAWN BY: ROY ROBINSON
TRANE © DATE: 30-JUL-14
REPLACES: --
REVISION DATE: --
CAD SYSTEM USED: Pro/DIAGRAM
SIMILAR TO: --

FILE NUMBER:

ODYSSEY
DIAGRAM
AIR HANDLER - SZVAV/2 SPEED
RELIATEL
--

DRAWING NUMBER: 12131400
SHEET: 1 OF 1
REV A