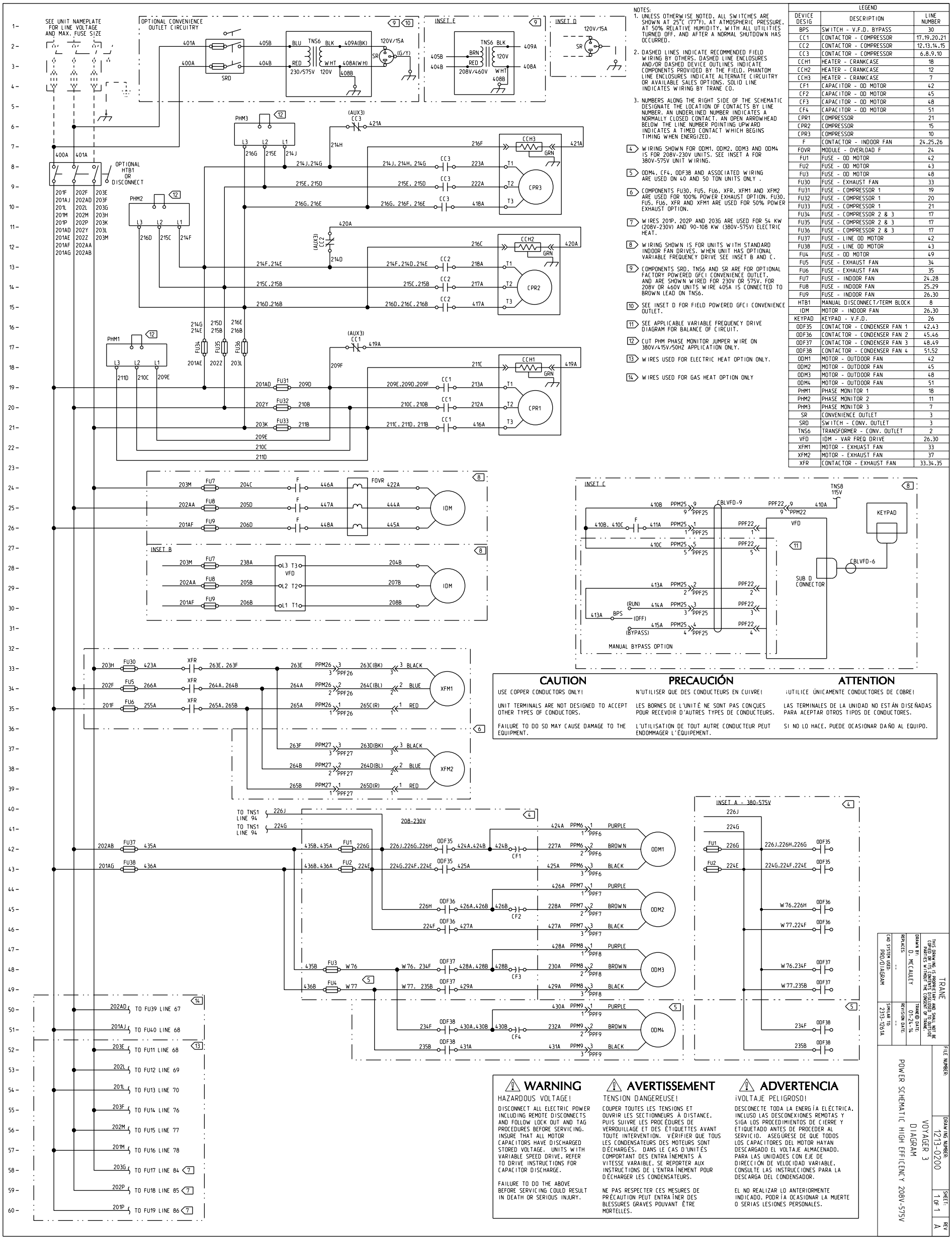


NOTES:

1. UNLESS OTHERWISE NOTED, ALL SWITCHES ARE SHOWN AT 25°C (77°F), AT ATMOSPHERIC PRESSURE, AT 50% RELATIVE HUMIDITY, WITH ALL UTILITIES TURNED OFF, AND AFTER A NORMAL SHUTDOWN HAS OCCURRED.
2. DASHED LINES INDICATE RECOMMENDED FIELD WIRING BY OTHERS. DASHED LINE ENCLOSURES AND/OR DASHED DEVICE OUTLINES INDICATE COMPONENTS PROVIDED BY THE FIELD. PHANTOM LINE ENCLOSURES INDICATE ALTERNATE CIRCUITRY OR AVAILABLE SALES OPTIONS. SOLID LINE INDICATES WIRING BY TRANE CO.
3. NUMBERS ALONG THE RIGHT SIDE OF THE SCHEMATIC DESIGNATE THE LOCATION OF CONTACTS BY LINE NUMBER. AN UNDERLINED NUMBER INDICATES A NORMALLY CLOSED CONTACT. AN OPEN ARROWHEAD BELOW THE LINE NUMBER POINTING UPWARD INDICATES A TIMED CONTACT WHICH BEGINS TIMING WHEN ENERGIZED.

4. WIRING SHOWN FOR ODM1, ODM2, ODM3 AND ODM4 IS FOR 208V-230V UNITS. SEE INSET A FOR 380V-575V UNIT WIRING.
5. ODM4, CF4, ODF38 AND ASSOCIATED WIRING ARE USED ON 40 AND 50 TON UNITS ONLY .
6. COMPONENTS FU30, FU5, FU6, XFR, XFM1 AND XFM2 ARE USED FOR 100% POWER EXHAUST OPTION. FU30, FU5, FU6, XFR AND XFM1 ARE USED FOR 50% POWER EXHAUST OPTION.
7. WIRES 201P, 202P AND 203G ARE USED FOR 54 KW (208V-230V) AND 90-108 KW (380V-575V) ELECTRIC HEAT.
8. WIRING SHOWN IS FOR UNITS WITH STANDARD INDOOR FAN DRIVES. WHEN UNIT HAS OPTIONAL VARIABLE FREQUENCY DRIVE SEE INSET B AND C.
9. COMPONENTS SRD, TNS6 AND SR ARE FOR OPTIONAL FACTORY POWERED GFCI CONVENIENCE OUTLET. AND ARE SHOWN WIRED FOR 230V OR 575V. FOR 208V OR 460V UNITS WIRE 405A IS CONNECTED TO BROWN LEAD ON TNS6.
10. SEE INSET D FOR FIELD POWERED GFCI CONVENIENCE OUTLET.
11. SEE APPLICABLE VARIABLE FREQUENCY DRIVE DIAGRAM FOR BALANCE OF CIRCUIT.
12. CUT PHM PHASE MONITOR JUMPER WIRE ON 380V/415V/50HZ APPLICATION ONLY.
13. WIRES USED FOR ELECTRIC HEAT OPTION ONLY.
14. WIRES USED FOR GAS HEAT OPTION ONLY

LEGEND

| DEVICE DESIG | DESCRIPTION | LINE NUMBER |
|---|---|---|
| BPS | SWITCH - V.F.D. BYPASS | 30 |
| CC1 | CONTACTOR - COMPRESSOR | 17.19.20.21 |
| CC2 | CONTACTOR - COMPRESSOR | 12.13.14.15 |
| CC3 | CONTACTOR - COMPRESSOR | 6.8.9.10 |
| CCH1 | HEATER - CRANKCASE | 18 |
| CCH2 | HEATER - CRANKCASE | 12 |
| CCH3 | HEATER - CRANKCASE | 7 |
| CF1 | CAPACITOR - OD MOTOR | 42 |
| CF2 | CAPACITOR - OD MOTOR | 45 |
| CF3 | CAPACITOR - OD MOTOR | 48 |
| CF4 | CAPACITOR - OD MOTOR | 51 |
| CPR1 | COMPRESSOR | 21 |
| CPR2 | COMPRESSOR | 15 |
| CPR3 | COMPRESSOR | 10 |
| F | CONTACTOR - INDOOR FAN | 24.25.26 |
| FOVR | MODULE - OVERLOAD F | 24 |
| FU1 | FUSE - OD MOTOR | 42 |
| FU2 | FUSE - OD MOTOR | 43 |
| FU3 | FUSE - OD MOTOR | 48 |
| FU30 | FUSE - EXHAUST FAN | 33 |
| FU31 | FUSE - COMPRESSOR 1 | 19 |
| FU32 | FUSE - COMPRESSOR 1 | 20 |
| FU33 | FUSE - COMPRESSOR 1 | 21 |
| FU34 | FUSE - COMPRESSOR 2 & 3 | 17 |
| FU35 | FUSE - COMPRESSOR 2 & 3 | 17 |
| FU36 | FUSE - COMPRESSOR 2 & 3 | 17 |
| FU37 | FUSE - LINE OD MOTOR | 42 |
| FU38 | FUSE - LINE OD MOTOR | 43 |
| FU4 | FUSE - OD MOTOR | 49 |
| FU5 | FUSE - EXHAUST FAN | 34 |
| FU6 | FUSE - EXHAUST FAN | 35 |
| FU7 | FUSE - INDOOR FAN | 24.28 |
| FU8 | FUSE - INDOOR FAN | 25.29 |
| FU9 | FUSE - INDOOR FAN | 26.30 |
| HTB1 | MANUAL DISCONNECT/TERM BLOCK | 8 |
| IDM | MOTOR - INDOOR FAN | 26.30 |
| KEYPAD | KEYPAD - V.F.D. | 26 |
| ODF35 | CONTACTOR - CONDENSER FAN 1 | 42.43 |
| ODF36 | CONTACTOR - CONDENSER FAN 2 | 45.46 |
| ODF37 | CONTACTOR - CONDENSER FAN 3 | 48.49 |
| ODF38 | CONTACTOR - CONDENSER FAN 4 | 51.52 |
| ODM1 | MOTOR - OUTDOOR FAN | 42 |
| ODM2 | MOTOR - OUTDOOR FAN | 45 |
| ODM3 | MOTOR - OUTDOOR FAN | 48 |
| ODM4 | MOTOR - OUTDOOR FAN | 51 |
| PHM1 | PHASE MONITOR 1 | 18 |
| PHM2 | PHASE MONITOR 2 | 11 |
| PHM3 | PHASE MONITOR 3 | 7 |
| SR | CONVENIENCE OUTLET | 3 |
| SRD | SWITCH - CONV. OUTLET | 3 |
| TNS6 | TRANSFORMER - CONV. OUTLET | 2 |
| VFD | IDM - VAR FREQ DRIVE | 26.30 |
| XFM1 | MOTOR - EXHUAST FAN | 33 |
| XFM2 | MOTOR - EXHAUST FAN | 37 |
| XFR | CONTACTOR - EXHAUST FAN | 33.34.35 |

## CAUTION

USE COPPER CONDUCTORS ONLY!

UNIT TERMINALS ARE NOT DESIGNED TO ACCEPT OTHER TYPES OF CONDUCTORS.

FAILURE TO DO SO MAY CAUSE DAMAGE TO THE EQUIPMENT.

## PRECAUCIÓN

N'UTILISER QUE DES CONDUCTEURS EN CUIVRE!

LES BORNES DE L'UNITÉ NE SONT PAS CONÇUES POUR RECEVOIR D'AUTRES TYPES DE CONDUCTEURS.

L'UTILISATION DE TOUT AUTRE CONDUCTEUR PEUT ENDOMMAGER L'ÉQUIPEMENT.

## ATTENTION

¡UTILICE ÚNICAMENTE CONDUCTORES DE COBRE!

LAS TERMINALES DE LA UNIDAD NO ESTÁN DISEÑADAS PARA ACEPTAR OTROS TIPOS DE CONDUCTORES.

SI NO LO HACE, PUEDE OCASIONAR DAÑO AL EQUIPO.

## ⚠ WARNING

HAZARDOUS VOLTAGE!

DISCONNECT ALL ELECTRIC POWER INCLUDING REMOTE DISCONNECTS AND FOLLOW LOCK OUT AND TAG PROCEDURES BEFORE SERVICING. INSURE THAT ALL MOTOR CAPACITORS HAVE DISCHARGED STORED VOLTAGE. UNITS WITH VARIABLE SPEED DRIVE, REFER TO DRIVE INSTRUCTIONS FOR CAPACITOR DISCHARGE.

FAILURE TO DO THE ABOVE BEFORE SERVICING COULD RESULT IN DEATH OR SERIOUS INJURY.

## ⚠ AVERTISSEMENT

TENSION DANGEREUSE!

COUPER TOUTES LES TENSIONS ET OUVRIR LES SECTIONNEURS À DISTANCE, PUIS SUIVRE LES PROCÉDURES DE VERROUILLAGE ET DES ÉTIQUETTES AVANT TOUTE INTERVENTION. VÉRIFIER QUE TOUS LES CONDENSATEURS DES MOTEURS SONT DÉCHARGÉS. DANS LE CAS D'UNITÉS COMPORTANT DES ENTRAÎNEMENTS À VITESSE VARIABLE, SE REPORTER AUX INSTRUCTIONS DE L'ENTRAÎNEMENT POUR DÉCHARGER LES CONDENSATEURS.

NE PAS RESPECTER CES MESURES DE PRÉCAUTION PEUT ENTRAÎNER DES BLESSURES GRAVES POUVANT ÊTRE MORTELLES.

## ⚠ ADVERTENCIA

¡VOLTAJE PELIGROSO!

DESCONECTE TODA LA ENERGÍA ELÉCTRICA, INCLUSO LAS DESCONEXIONES REMOTAS Y SIGA LOS PROCEDIMIENTOS DE CIERRE Y ETIQUETADO ANTES DE PROCEDER AL SERVICIO. ASEGÚRESE DE QUE TODOS LOS CAPACITORES DEL MOTOR HAYAN DESCARGADO EL VOLTAJE ALMACENADO. PARA LAS UNIDADES CON EJE DE DIRECCIÓN DE VELOCIDAD VARIABLE, CONSULTE LAS INSTRUCCIONES PARA LA DESCARGA DEL CONDENSADOR.

EL NO REALIZAR LO ANTERIORMENTE INDICADO, PODRÍA OCASIONAR LA MUERTE O SERIAS LESIONES PERSONALES.

TRANE

THIS DRAWING IS PROPRIETARY AND SHALL NOT BE COPIED OR IMITATED IN WHOLE OR IN PART WITHOUT THE CONSENT OF TRANE.

DRAWN BY: D. MCCAULEY
TRANE® DATE: 01-24-14
REPLACES: --
REVISION DATE:
CAD SYSTEM USED: PRO/DIAGRAM
SIMILAR TO: 2313-1261A

FILE NUMBER:
DRAWING NUMBER: 1213-0200
SHEET: 1 OF 1
REV: A

VOYAGER 3
DIAGRAM
POWER SCHEMATIC HIGH EFFICENCY 208V-575V