Product and Submittal Data

Split System Air Conditioner

N5AC3018B
N5AC3024B
N5AC3030B
N5AC3036B
N5AC3042B
N5AC3048B
N5AC3060B

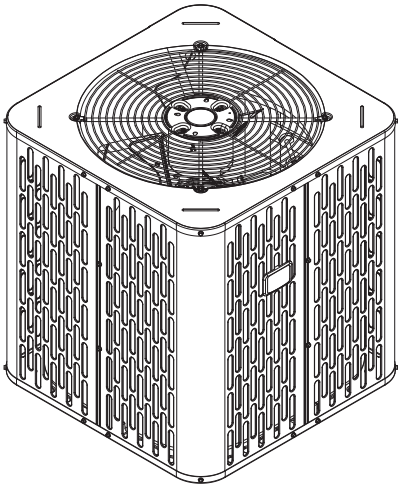

Note: *Graphics in this document are for representation only. Actual model may differ in appearance.*

October 2026

ODR-PSD045B-EN

Introduction

Copyright

This document and the information in it are the property of Trane, and may not be used or reproduced in whole or in part without written permission. Trane reserves the right to revise this publication at any time, and to make changes to its content without obligation to notify any person of such revision or change.

Trademark

All trademarks referenced in this document are the trademarks of their respective owners.

Revision History

Added a wiring diagram for 048 and 060 models.

Table of Contents

Model Number Description 4
General Data 5
Product Specifications 6
Sound Power Level 9
Wiring Diagrams 10
Dimensional Data 13
Mechanical Specification Options 14

Model Number Description

Digit 1 — Brand

A = RunTru by Trane / Ameristar by American Standard
N = Trane Advantage

Digit 2 — Refrigerant Type

4 = R-410A
5 = R-454B

Digit 3, 4 — Product Family

AC = Air Conditioner
HP = Heat Pump
HL = Side Discharge

Digit 5 — Nominal Efficiency Rating

3 = 13.4 SEER2
4 = 14.3 SEER2
5 = 15.2 SEER2

Digit 6, 7 ,8 — Nominal Capacity

BTU/Hour x 100

Digit 9 — Major Development Sequence

Primary Design / Form Series
Alphabetic Character “A” through “Z”

Digit 10 — Electric Power Supply

1 = 200-230V/1PH/60Hz or 208-230V/1PH/60Hz

Digit 11, 12, 13 — Secondary Function

000 = No Secondary Function

Digit 14, 15 — Minor Design Sequence/Series - Design Change

Alphabetic Character “A” through “Z”

General Data

AHRI standard 210/240 rating conditions:

- Cooling: 80°F DB; air entering indoor coil: 67°F WB; air entering outdoor coil: 95°F DB
- High temperature heating: 47°F DB; air entering outdoor coil: 43°F WB; entering indoor coil: 70°F DB
- Low temperature heating: 17°F DB; air entering outdoor coil: 15°F WB; air entering indoor coil: 70°F DB
- Rated indoor airflow for heating is the same as for cooling.

AHRI standard 270 rating conditions:

The noise rating numbers are determined with the unit in cooling operation. Standard Noise Rating number is at 95°F outdoor air.

Product Specifications

Table 1. Models — N5AC3018B1000A, N5AC3024B1000A, N5AC3030B1000A, and N5AC3036B1000A

Outdoor Unit [a] [b]	**N5AC3018B1000**	**N5AC3024B1000**	**N5AC3030B1000**	**N5AC3036B1000**
14th Digit of the Model Number	A	A	A	A
Power Conns. – V/Ph/Hz [c]	208/230/1/60	208/230/1/60	208/230/1/60	208/230/1/60
Min. BRCH. CIR. Ampacity	9	13	17	18
BR. CIR. PROT. RTG. – Max. (Amps)	15	20	25	30
Compressor	Scroll	Scroll	Scroll	Scroll
No. Stages	1	1	1	1
Volts/Ph/Hz	208/230/1/60	208/230/1/60	208/230/1/60	208/230/1/60
R.L. Amps [d] - L.R. Amps	6.9 - 45.0	9.6 - 59	12.6 - 71	13.9 - 75
Factory Installed				
Start Components [e]	No	No	No	No
Insulation/Sound Blanket	No	No	No	No
Compressor Heat	No	No	No	No
Outdoor Fan	Propeller	Propeller	Propeller	Propeller
Dia. (in.)	18	18	18	19
Type Drive - No. Speeds	Direct - 1	Direct - 1	Direct - 1	Direct - 1
CFM @ 0.0 (in.) W.G. [f]	1878	1878	2447	2726
HP	1/12	1/12	1/8	1/8
Motor Speed – rpm	810	810	1100	1100
Volts/Ph/Hz	208/230/1/60	208/230/1/60	208/230/1/60	208/230/1/60
F.L. Amps	0.54	0.54	0.85	0.85
Outdoor Coil - Type	All Aluminum	All Aluminum	All Aluminum	All Aluminum
Rows - F.P.I.	1 - 24	1 - 24	1 - 24	1 - 24
Face Area (sq. ft.)	12.64	12.64	12.64	13.75
Tube Size (in.)	3/8	3/8	3/8	3/8
Refrigerant				
lb – R-454B (O.D. Unit) [g]	3 lb, 13 oz	3 lb, 13 oz	3 lb, 13 oz	3 lb, 14 oz
Factory Supplied	Yes	Yes	Yes	Yes
Valve Connection Size - (in.) O.D. Gas	3/4	3/4	3/4	3/4
Valve Connection Size - (in.) O.D. Liq.	5/16	5/16	5/16	5/16
Line Size – (in.) O.D. Gas [h] [i]	3/4	3/4	3/4	3/4
Line Size - (in.) O.D. Liq.	5/16	5/16	5/16	5/16
Charging Specifications				
Subcooling	10°F	10°F	10°F	10°F
Dimensions	H × W × D			
Crated (in.)	34.1 x 25.4 x 25.4	34.1 x 25.4 x 25.4	34.1 x 25.4 x 25.4	34.1 x 27.4 x 27.4
Weight				
Shipping (lb)	152	152	152	158
Net (lb)	130	130	130	134
Optional Accessories:				
Rubber Isolator Kit	BAYISLT101	BAYISLT101	BAYISLT101	BAYISLT101

Table 1. Models — N5AC3018B1000A, N5AC3024B1000A, N5AC3030B1000A, and N5AC3036B1000A (continued)

Outdoor Unit [a] [b]	N5AC3018B1000	N5AC3024B1000	N5AC3030B1000	N5AC3036B1000
Snow Leg — Base and Cap 4 in. High	BAYLEGS002	BAYLEGS002	BAYLEGS002	BAYLEGS002
Snow Leg — 4 in. Extension	BAYLEGS003	BAYLEGS003	BAYLEGS003	BAYLEGS003
Extreme Condition Mounting Kit	BAYECMT023	BAYECMT023	BAYECMT023	BAYECMT023
Evap. Defrost Control Kit	AY28X079	AY28X079	AY28X079	AY28X079
Crankcase Heater Kit (Scroll)	BAYCCHT302RES	BAYCCHT302RES	BAYCCHT302RES	BAYCCHT302RES
External Low Ambient Kit	BAYLOAM108	BAYLOAM108	BAYLOAM108	BAYLOAM108
External Start Kit	BAYKSKT267	BAYKSKT267	BAYKSKT267	BAYKSKT267
Scroll Compressor Enclosure	BAYSDEN004	BAYSDEN004	BAYSDEN004	BAYSDEN004
Refrigerant Lineset [j]				

[a] Certified in accordance with the Air-Source Unitary Air-conditioner Equipment certification program, which is based on AHRI standard 210/240.
[b] Rated in accordance with AHRI standard 270.
[c] Calculated in accordance with Natl. Elec. Codes. Use only HACR circuit breakers or fuses.
[d] This value shown for compressor RLA on the unit nameplate and on this specification sheet is used to compute minimum branch circuit ampacity and maximum fuse size. The value shown is the branch circuit selection current.
[e] Use start components only when compressor is found to enter locked rotor condition and will not start or when lights dim at compressor start. "No" means no start components. "Yes" means quick start kit components. "PTC" means positive temperature coefficient starter. Optional kit shown.
[f] Standard Air - Dry Coil - Outdoor.
[g] This value is approximate. For a more precise value, see unit nameplate.
[h] Reference the outdoor unit ship-with literature for refrigerant piping length and lift guidelines. Reference the refrigerant piping software pub # 32-3312-xx or *Refrigerant Piping Manual for Small Split Cooling and Heat Pump Systems Application Guide* (SS-APG006*-EN) for long line sets or specialty applications (xx denotes latest revision).
[i] The outdoor condensing units are factory charged with the system charge required for the outdoor condensing unit, fifteen (15) feet of tested connecting line, and the nominal rated indoor evaporative coil match. Always verify proper system charge via subcooling (TXV/EEV) or superheat (fixed orifice) per the unit nameplate.
[j] 25, 30, 35 and 50 foot linesets available. For a complete listing of lineset options available from equipment or supply stores, refer to the Trane Residential and Light Commercial Product Handbook.

Table 2. Models — N5AC3042B1000A, N5AC3048B1000A, and N5AC3060B1000A

Outdoor Unit [a] [b]	N5AC3042B1000	N5AC3048B1000	N5AC3060B1000
14th Digit of the Model Number	A	A	A
Power Conns. – V/Ph/Hz [c]	208/230/1/60	208/230/1/60	208/230/1/60
Min. BRCH. CIR. Ampacity	22	26	32
BR. CIR. PROT. RTG. – Max. (Amps)	35	45	50
Compressor	Scroll	Scroll	Scroll
No. Stages	1	1	1
Volts/Ph/Hz	208/230/1/60	208/230/1/60	208/230/1/60
R.L. Amps [d] - L.R. Amps	17 - 95	20 - 96.1	25 - 125
Factory Installed			
Start Components [e]	No	No	No
Insulation/Sound Blanket	No	No	No
Compressor Heat	No	No	No
Outdoor Fan	Propeller	Propeller	Propeller
Dia. (in.)	23	23	27.5
Type Drive - No. Speeds	Direct - 1	Direct - 1	Direct - 1
CFM @ 0.0 (in.) W.G. [f]	3501	3180	4336
HP	1/8	1/5	1/5
Motor Speed – rpm	1100	850	850
Volts/Ph/Hz	208/230/1/60	208/230/1/60	208/230/1/60
F.L. Amps	0.88	1.05	1.05
Outdoor Coil - Type	All Aluminum	All Aluminum	All Aluminum
Rows - F.P.I.	1 - 24	1 - 24	1 - 24

Table 2. Models — N5AC3042B1000A, N5AC3048B1000A, and N5AC3060B1000A (continued)

Outdoor Unit [a] [b]	N5AC3042B1000	N5AC3048B1000	N5AC3060B1000
Face Area (sq. ft.)	16.25	16.25	19.07
Tube Size (in.)	3/8	3/8	3/8
Refrigerant			
lb – R-454B (O.D. Unit) [g]	4 lb, 10 oz	4 lb, 10 oz	5 lb, 6 oz
Factory Supplied	Yes	Yes	Yes
Valve Connection Size - (in.) O.D. Gas	3/4	7/8	7/8
Valve Connection Size - (in.) O.D. Liq.	5/16	5/16	3/8
Line Size – (in.) O.D. Gas [h] [i]	3/4	7/8	1 - 1/8
Line Size - (in.) O.D. Liq.	5/16	5/16	3/8
Charging Specifications			
Subcooling	10°F	10°F	10°F
Dimensions	H × W × D		
Crated (in.)	34.1 x 31.5 x 31.5	34.1 x 31.5 x 31.5	34.1 x 36 x 36
Weight			
Shipping (lb)	172	189	189
Net (lb)	144	161	161
Optional Accessories:			
Rubber Isolator Kit	BAYISLT101	BAYISLT101	BAYISLT101
Snow Leg — Base and Cap 4 in. High	BAYLEGS002	BAYLEGS002	BAYLEGS002
Snow Leg — 4 in. Extension	BAYLEGS003	BAYLEGS003	BAYLEGS003
Extreme Condition Mounting Kit	BAYECMT023	BAYECMT023	BAYECMT023
Evap. Defrost Control Kit	AY28X079	AY28X079	AY28X079
Crankcase Heater Kit (Scroll)	BAYCCHT302RES	BAYCCHT301RES	BAYCCHT301RES
External Low Ambient Kit	BAYLOAM108	BAYLOAM108	BAYLOAM108
External Start Kit	BAYKSKT267	BAYKSKT267	BAYKSKT267
Small Scroll Compressor Enclosure	BAYSDEN004	BAYSDEN004	BAYSDEN004
Refrigerant Lineset [j]			

[a] Certified in accordance with the Air-Source Unitary Air-conditioner Equipment certification program, which is based on AHRI standard 210/240.
[b] Rated in accordance with AHRI standard 270.
[c] Calculated in accordance with Natl. Elec. Codes. Use only HACR circuit breakers or fuses.
[d] This value shown for compressor RLA on the unit nameplate and on this specification sheet is used to compute minimum branch circuit ampacity and maximum fuse size. The value shown is the branch circuit selection current.
[e] Use start components only when compressor is found to enter locked rotor condition and will not start or when lights dim at compressor start. "No" means no start components. "Yes" means quick start kit components. "PTC" means positive temperature coefficient starter. Optional kit shown.
[f] Standard Air - Dry Coil - Outdoor.
[g] This value is approximate. For a more precise value, see unit nameplate.
[h] Reference the outdoor unit ship-with literature for refrigerant piping length and lift guidelines. Reference the refrigerant piping software pub # 32-3312-xx or *Refrigerant Piping Manual for Small Split Cooling and Heat Pump Systems Application Guide* (SS-APG006*-EN) for long line sets or specialty applications (xx denotes latest revision).
[i] The outdoor condensing units are factory charged with the system charge required for the outdoor condensing unit, fifteen (15) feet of tested connecting line, and the nominal rated indoor evaporative coil match. Always verify proper system charge via subcooling (TXV/EEV) or superheat (fixed orifice) per the unit nameplate.
[j] 25, 30, 35 and 50 foot linesets available. For a complete listing of lineset options available from equipment or supply stores, refer to the Trane Residential and Light Commercial Product Handbook.

Sound Power Level

Table 3. Models — N5AC3018B, N5AC3024B, N5AC3030B, N5AC3036B, N5AC3042B, N5AC3048B, and N5AC3060B

Model	A-Weighted Sound Power Level [dB (A)]	Full Octave Sound Power(dB)							
		63 Hz[(a)]	125 Hz	250 Hz	500 Hz	1000 Hz	2000 Hz	4000 Hz	8000 Hz
N5AC3018B	75	84	71	70	73	73	66	58	51
N5AC3024B	75	84	71	70	73	73	66	58	51
N5AC3030B	75	84	71	70	73	73	66	58	51
N5AC3036B	75	79	72	72	73	72	67	60	55
N5AC3042B	73	70	69	69	67	70	65	63	58
N5AC3048B	73	70	69	69	67	70	65	63	58
N5AC3060B	76	76	77	76	73	72	67	64	57

Note: Rated in accordance with AHRI Standard 270–2008.

(a) For reference only.

Wiring Diagrams

Figure 1. Wiring diagram – models 018B, 024B, 030B, 036B, and 042B

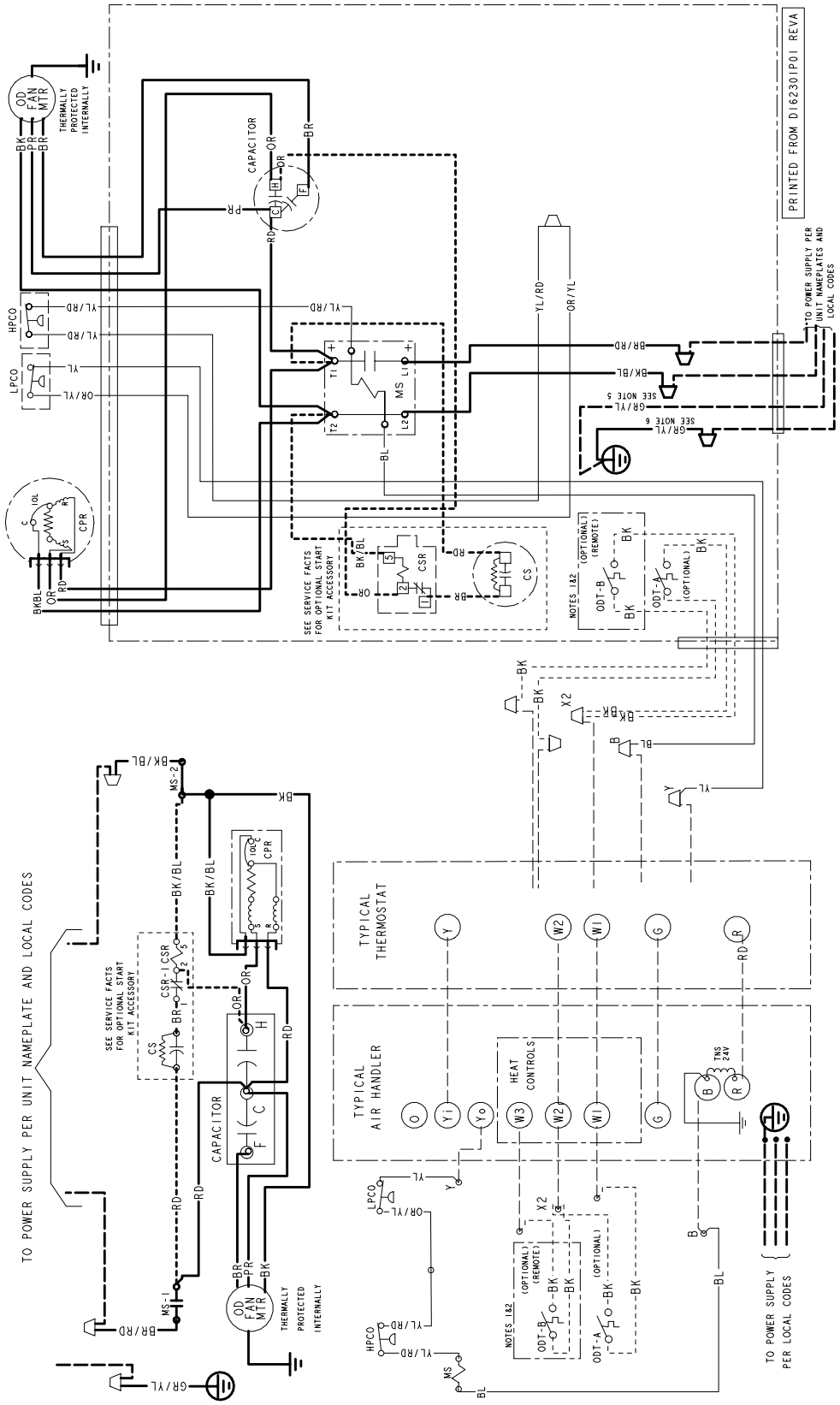

Figure 2. Wiring diagram – models 048B and 060B

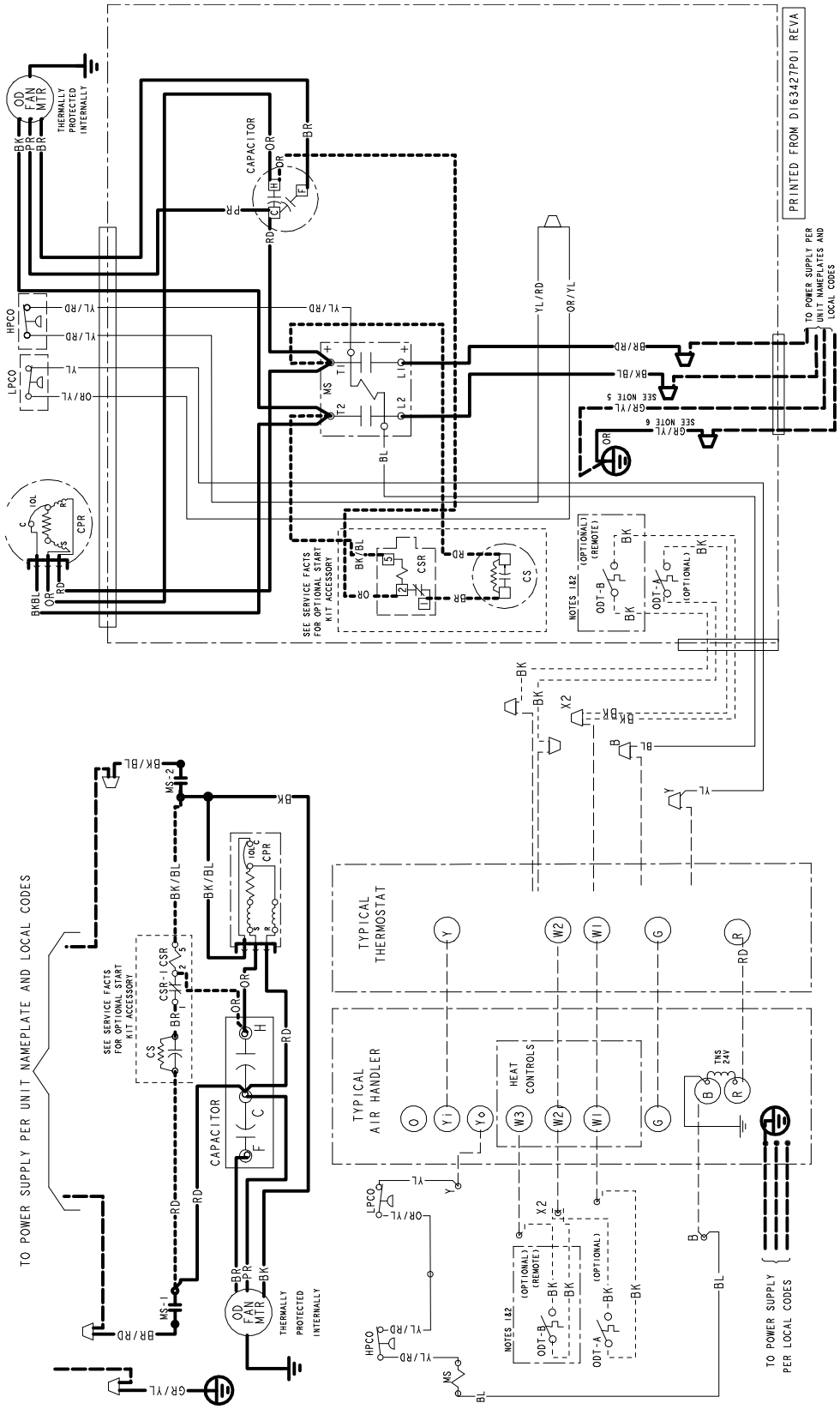

Figure 3. Wiring diagrams - notes and legend

NOTES:

1. IF ODT-B IS NOT USED. ADD JUMPER BETWEEN W2 & W3 AT AIR HANDLER. IF USED, ODT-B MUST BE MOUNTED REMOTE OF CONTROL BOX IN AN APPROVED WEATHER PROOF ENCLOSURE.
2. IF ODT-A IS NOT USED. ADD JUMPER BETWEEN W1 & W2 AT AIR HANDLER.
3. LOW VOLTAGE (24 V) FIELD WIRING MUST BE 18 AWG MINIMUM.
4. USE COPPER CONDUCTORS ONLY!
5. FIELD GROUND MUST BE ATTACHED TO THE GROUND LUG ON THE RUNTRU AND AMERISTAR UNITS.
6. GROUND CONNECTION FOR TRANE/ AMERICAN STANDARD ONLY.

FOR CANADIAN INSTALLATIONS
POUR INSTALLATIONS CANADIENNES

CAUTION: NOT SUITABLE FOR USE ON SYSTEMS EXCEEDING 150V-TO-GROUND
ATTENTION:NE CONVIENT PAS AUX INSTALLATIONS DE PLUS DE 150 V A LA TERRE

LEGEND ADDED NOTES AND TABLE FOR PAPER DETAILS.

CF	FAN CAPACITOR
CN	WIRE CONNECTOR
CPR	COMPRESSOR
CR	RUN CAPACITOR
CS	STARTING CAPACITOR
CSR	CAPACITOR SWITCHING RELAY
ODT	OUTDOOR THERMOSTAT
HPCO	HIGH PRESSURE CUTOUT SWITCH
LPCO	LOW PRESSURE CUTOUT SWITCH
MS	COMPRESSOR MOTOR CONTACTOR
TNS	TRANSFORMER
IOL	INTERNAL OVERLOAD PROTECTOR

24 V / LINE V — FACTORY WIRING

24 V / LINE V — FIELD WIRING

FIELD INSTALLED FACTORY WIRING

COLOR OF WIRE

BK/BL

COLOR OF MARKER

BK	BLACK	RD	RED	OR	ORANGE
BL	BLUE	WH	WHITE	GR	GREEN
BR	BROWN	YL	YELLOW	PR	PURPLE
PK	PINK				

MAGNETIC COIL

GROUND

JUNCTION

CAPACITOR

WIRE NUT OR

TERMINAL

TRANSFORMER

POL.PLUG FEMALE HOUSING (MALE TERMINALS)

POL. PLUG MALE HOUSING (FEMALE TERMINALS)

TERMINAL BLOCK/BOARD

RELAY CONTACT (N.O)

RELAY CONTACT (N.C)

THERMISTOR

TEMP ACTUATED SWITCH

INTERNAL OVERLOAD PROTECTION

PRESSURE ACTUATED SWITCH

RESISTER OR HEATING ELEMENT

MOTOR WINDING

Dimensional Data

Figure 4. Dimensional drawing

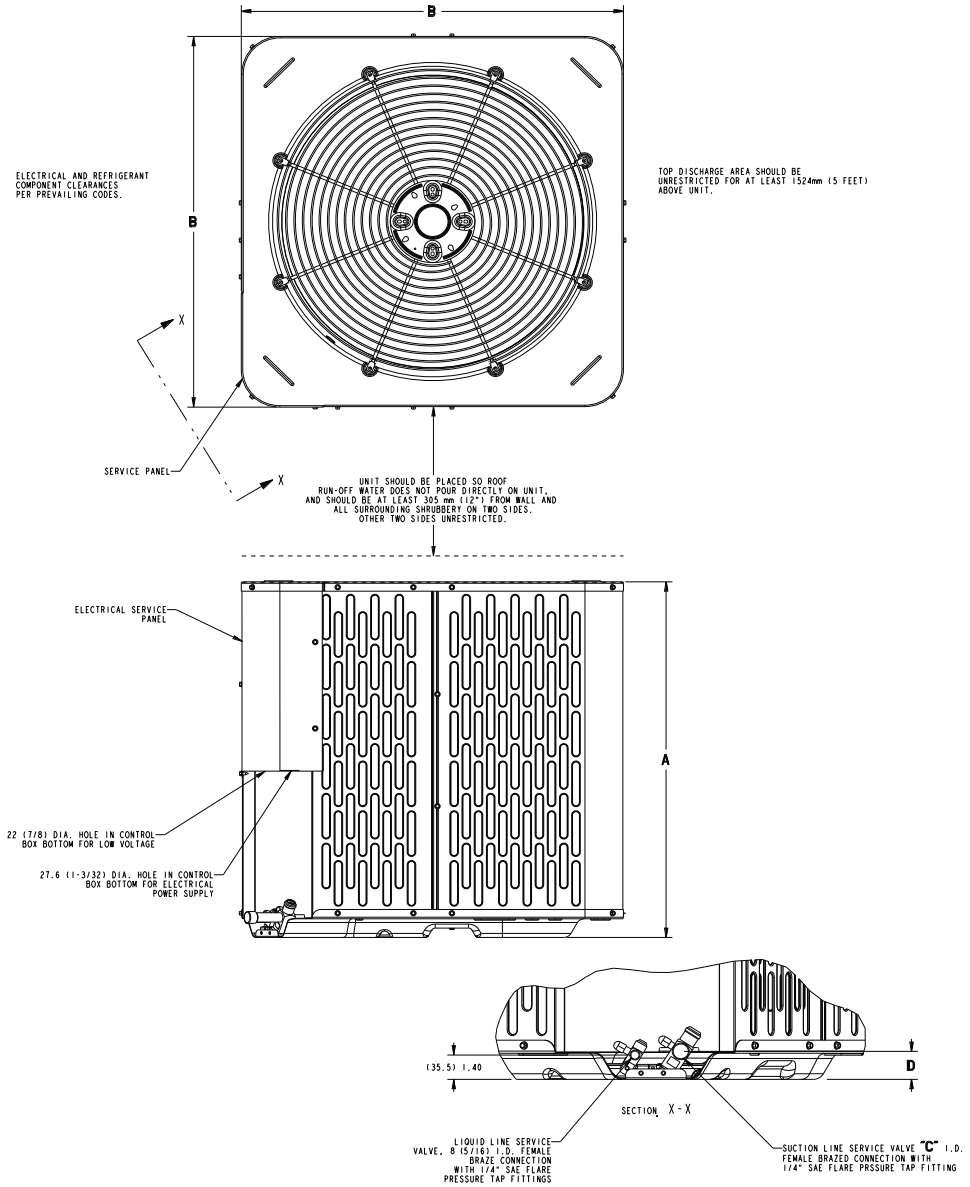

Table 4. Unit dimensions (mm (inch))

Model	Base	A	B	C	D
N5AC3018B	1A.2	727 (28-5/8)	600 (23-5/8)	19 (3/4)	41 (1-5/8)
N5AC3024B	1A.2	727 (28-5/8)	600 (23-5/8)	19 (3/4)	41 (1-5/8)
N5AC3030B	1A.2	727 (28-5/8)	600 (23-5/8)	19 (3/4)	41 (1-5/8)
N5AC3036B	2.2	727 (28-5/8)	651 (25-5/8)	19 (3/4)	41 (1-5/8)
N5AC3042B	3.2	727 (28-5/8)	756 (29-3/4)	19 (3/4)	41 (1-5/8)
N5AC3048B	3.2	727 (28-5/8)	756 (29-3/4)	22 (7/8)	43 (1-3/4)
N5AC3060B	4.2	727 (28-5/8)	870 (34-1/4)	22 (7/8)	43 (1-3/4)

Mechanical Specification Options

General

The outdoor condensing units are factory charged with the system charge required for the outdoor condensing unit, fifteen (15) feet of tested connecting line, and the nominal rated indoor evaporative coil match. This unit is designed to operate at outdoor ambient temperatures as high as 115°F. Cooling capacities are matched with a wide selection of air handlers and furnace coils that are AHRI certified. The unit is certified to UL 60335-2-40. Exterior is designed for outdoor application.

Casing

Unit casing is constructed of heavy gauge, galvanized steel and painted with a weather-resistant powder paint finish. The corner panels are prepainted. All panels are subjected to our 1,000 hour salt spray test.

Refrigerant Controls

Refrigeration system controls include condenser fan, compressor contactor and low and high pressure switches.

Compressor

The compressor features internal over temperature and pressure protection. Other features include: Centrifugal oil pump and low vibration and noise.

Condenser Coil

The outdoor coil provides low airflow resistance and efficient heat transfer. The coil is protected on all four sides by louvered panels.

Low Ambient Cooling

As manufactured, this system has a cooling capacity to 55°F. The addition of an evaporator defrost control permits operation to 40°F. The addition of an evaporator defrost control with TXV permits low ambient cooling to 30°F.

The addition of the BAYLOAM108 low ambient kit permits ambient cooling to 20°F.

Thermostats

Cooling only and heat/cooling (manual and automatic change over). Sub-base to match thermostat and locking thermostat cover.

About Trane and American Standard Heating and Air Conditioning

Trane and American Standard create comfortable, energy efficient indoor environments for residential applications. For more information, please visit www.trane.com or www.americanstandardair.com.

The AHRI Certified mark indicates company participation in the AHRI Certification program. For verification of individual certified products, go to ahridirectory.org.

The manufacturer has a policy of continuous data improvement and it reserves the right to change design and specifications without notice. We are committed to using environmentally conscious print practices.

ODR-PSD045B-EN 30 Oct 2026
Supersedes ODR-PSD045A-EN (March 2026)

©2026