Installation, Operation, and Maintenance

Heat Pumps

N5HP5018A
N5HP5024A
N5HP5030A
N5HP5036A
N5HP5042A
N5HP5048A
N5HP5060A

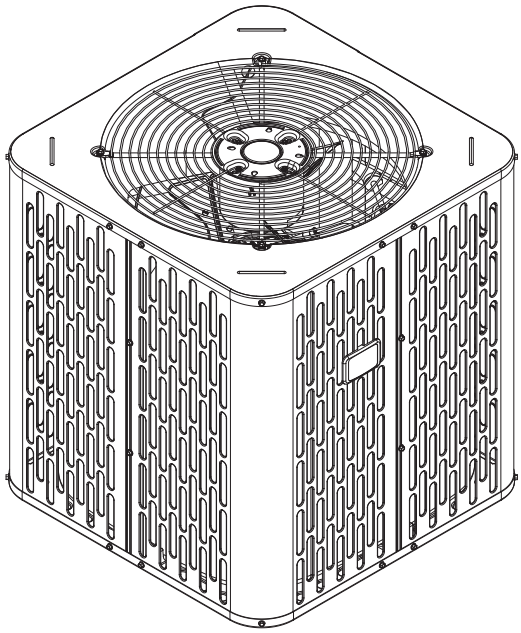

Note: *Graphics in this document are for representation only. Actual model may differ in appearance.*

⚠ SAFETY WARNING

Only qualified personnel should install and service the equipment. The installation, starting up, and servicing of heating, ventilating, and air-conditioning equipment can be hazardous and requires specific knowledge and training. Improperly installed, adjusted or altered equipment by an unqualified person could result in death or serious injury. When working on the equipment, observe all precautions in the literature and on the tags, stickers, and labels that are attached to the equipment.

September 2026

ODR-SVX031B-EN

Introduction

Read this manual thoroughly before operating or servicing this unit.

This document is customer property and is to remain with this unit. Return to the service information pack upon completion of work.

Warnings, Cautions, and Notices

Safety advisories appear throughout this manual as required. Your personal safety and the proper operation of this machine depend upon the strict observance of these precautions.

The three types of advisories are defined as follows:

⚠ WARNING	Indicates a potentially hazardous situation which, if not avoided, could result in death or serious injury.
⚠ CAUTION	Indicates a potentially hazardous situation which, if not avoided, could result in minor or moderate injury. It could also be used to alert against unsafe practices.
NOTICE	Indicates a situation that could result in equipment or property-damage only accidents.

Important Environmental Concerns

Scientific research has shown that certain man-made chemicals can affect the earth's naturally occurring stratospheric ozone layer when released to the atmosphere. In particular, several of the identified chemicals that may affect the ozone layer are refrigerants that contain Chlorine, Fluorine and Carbon (CFCs) and those containing Hydrogen, Chlorine, Fluorine and Carbon (HCFCs). Not all refrigerants containing these compounds have the same potential impact to the environment. Trane advocates the responsible handling of all refrigerants.

Important Responsible Refrigerant Practices

Trane believes that responsible refrigerant practices are important to the environment, our customers, and the air conditioning industry. All technicians who handle refrigerants must be certified according to local rules. For the USA, the Federal Clean Air Act (Section 608) sets forth the requirements for handling, reclaiming, recovering and recycling of certain refrigerants and the equipment that is used in these service procedures. In addition, some states or municipalities may have additional requirements that must also be adhered to for responsible management of refrigerants. Know the applicable laws and follow them.

⚠ WARNING

Proper Field Wiring and Grounding Required!

Failure to follow code could result in death or serious injury.

All field wiring MUST be performed by qualified personnel. Improperly installed and grounded field wiring poses FIRE and ELECTROCUTION hazards. To avoid these hazards, you MUST follow requirements for field wiring installation and grounding as described in NEC and your local/state/national electrical codes.

⚠ WARNING

Personal Protective Equipment (PPE) Required!

Failure to wear proper PPE for the job being undertaken could result in death or serious injury.

Technicians, in order to protect themselves from potential electrical, mechanical, and chemical hazards, MUST follow precautions in this manual and on the tags, stickers, and labels, as well as the instructions below:

- **Before installing/servicing this unit, technicians MUST put on all PPE required for the work being undertaken (Examples; cut resistant gloves/ sleeves, butyl gloves, safety glasses, hard hat/ bump cap, fall protection, electrical PPE and arc flash clothing). ALWAYS refer to appropriate Safety Data Sheets (SDS) and OSHA guidelines for proper PPE.**
- **When working with or around hazardous chemicals, ALWAYS refer to the appropriate SDS and OSHA/GHS (Global Harmonized System of Classification and Labelling of Chemicals) guidelines for information on allowable personal exposure levels, proper respiratory protection and handling instructions.**
- **If there is a risk of energized electrical contact, arc, or flash, technicians MUST put on all PPE in accordance with OSHA, NFPA 70E, or other country-specific requirements for arc flash protection, PRIOR to servicing the unit. NEVER PERFORM ANY SWITCHING, DISCONNECTING, OR VOLTAGE TESTING WITHOUT PROPER ELECTRICAL PPE AND ARC FLASH CLOTHING. ENSURE ELECTRICAL METERS AND EQUIPMENT ARE PROPERLY RATED FOR INTENDED VOLTAGE.**

⚠ WARNING

Follow EHS Policies!

Failure to follow instructions below could result in death or serious injury.

- **All Trane personnel must follow the company's Environmental, Health and Safety (EHS) policies when performing work such as hot work, electrical, fall protection, lockout/tagout, refrigerant handling, etc. Where local regulations are more stringent than these policies, those regulations supersede these policies.**
- **Non-Trane personnel should always follow local regulations.**

⚠ WARNING

Cancer and Reproductive Harm!

This product can expose you to chemicals, including lead, which are known to the State of California to cause cancer and birth defects or other reproductive harm. For more information go to www.P65Warnings.ca.gov.

⚠ WARNING

Safety Hazard!

Failure to follow instructions below could result in death or serious injury or property damage.

This unit is not to be used by persons (including children) with reduced physical, sensory, or mental capabilities, or lack of experience and knowledge, unless they have been given supervision or instruction concerning the use of the appliance by a person responsible for their safety.

Do not allow children to play or climb on the unit or to clean or maintain the unit without supervision.

⚠ WARNING

Follow National Building Codes!

Failure to follow instructions below could result in death or serious injury, or property damage.

This product designed and manufactured to permit installation in accordance with the National Electric Code, NFPA No. 90A and 90B, and any other local codes or utilities requirements. It is the installer's responsibility to verify that product is installed in strict compliance with national and local codes. Manufacturer will not take responsibility for any damage caused due to installations violating regulations.

⚠ WARNING

Risk of Fire — Flammable Refrigerant!

Failure to follow instructions below could result in death or serious injury, and equipment damage.

- **To be repaired only by trained service personnel.**
- **Do not puncture refrigerant tubing.**
- **Dispose of properly in accordance with federal or local regulations.**

⚠ WARNING

Safety Hazard!

Failure to follow instructions below could result in death or serious injury and/or property damage.

Only qualified personnel with adequate electrical and mechanical experience must repair the unit. The manufacturer or seller is not responsible for any interpretation or resulting liability.

⚠ WARNING

System Charge!

Failure to follow instructions below could result in abrupt release of system charge and could result in serious injury or property damage.

When opening the suction and liquid line service valve, turn the valve stem counterclockwise only until the stem contacts the rolled edge. Do not apply torque.

⚠ WARNING

Ventilation Required!

Failure to follow instructions below could result in death or serious injury or property damage.

Confirm the area is adequately ventilated before breaking into the system or conducting any hot work.

⚠ WARNING

Safety Hazard!

Failure to follow instructions below could result in death or serious injury and equipment or property damage.

- **Do not use any items other than those approved by the manufacturer for the defrosting or cleaning process.**
- **Do not pierce or burn.**
- **Be cautious that refrigerants may be odorless.**

⚠ WARNING

Live Electrical Components!

Failure to follow all electrical safety precautions when exposed to live electrical components could result in death or serious injury.

When it is necessary to work with live electrical components, have a qualified licensed electrician or other individual who has been properly trained in handling live electrical components perform these tasks.

⚠ CAUTION

Unit Contains R–454B Refrigerant!

Failure to use proper service tools may result in equipment damage or personal injury.

Use only R-454B refrigerant and approved compressor oil.

⚠ CAUTION

Brazed Joints!

Failure to follow instructions below could result in minor to moderate injury or equipment damage.

When using existing refrigerant lines, verify all joints are brazed and not soldered.

⚠ CAUTION

Hot Surface!

Failure to follow instructions below could result in minor to severe burns.

Do not touch top of compressor. It may be hot.

Copyright

This document and the information in it are the property of Trane, and may not be used or reproduced in whole or in part without written permission. Trane reserves the right to revise this publication at any time, and to make changes to its content without obligation to notify any person of such revision or change.

Trademark

All trademarks referenced in this document are the trademarks of their respective owners.

Revision History

Updated figures in the Wiring Diagram chapter

Table of Contents

Pre-Installation 6
General 6
Operating Range. 7
Piping Guidelines 7
Unit Dimensions and Weights. 7
Refrigerant Piping Limits 7
High Voltage 8
Cold Climate Considerations 9
Unit Preparation 9
Prepare the Unit for Installation 9
Setting the Unit 9
Pad Installation 9
Refrigeration 9
Refrigerant Line Considerations. 9
Line Routing. 10
Line Brazing. 11
Refrigerant Line Leak Check. 13
Evacuation and Servicing 14
Evacuate the Refrigerant Lines and Indoor Coil 14
Servicing 14
Service Valves 14
Open the Gas Service Valve First 14
Open the Liquid Service Valve Second 15
Electrical 16
Maximum Wire Length 16
Heat Pumps N5HP5 Low Voltage Connection Diagrams. 16
Mitigation Board Guidelines 19
Defrost Control - All Models Except 036 19
Defrost Control - 036 Model Only. 19
High Voltage 20
High Voltage Power Supply. 20
System Start-Up 21
System Charge Adjustment 22
Temperature Measurements 22
Subcooling Charging in Cooling (Above 55º F Outdoor Temp.). 22
Charging the Unit 24
Subcooling Charging Below 55º F Outdoor Temp. (In Heating Only) 25
Checkout Procedures 26
Operational and Checkout Procedures 26
Defrost Control 27
Defrost Control 27
Fault Detection 27
Pin Identification on J5 27
Defrost Control Checkout 27
Test Sensors 27
Troubleshooting 30
Wiring Diagrams. 33
Pressure Curves. 37
Refrigerant Circuit 41

Pre-Installation

General

⚠ WARNING

Safety Hazard!

Failure to follow instructions below could result in death or serious injury and/or property damage.

Only qualified personnel should install and service the equipment. The installation, starting up, and servicing of heating, ventilating, and air-conditioning equipment can be hazardous and requires specific knowledge and training. Improperly installed, adjusted or altered equipment by an unqualified person could result in death or serious injury. When working on the equipment, observe all precautions in the literature and on the tags, stickers, and labels that are attached to the equipment.

⚠ WARNING

Risk of Fire — Flammable Refrigerant!

Failure to follow instructions below could result in death or serious injury, and equipment damage.

- **To be repaired only by trained service personnel.**
- **Do not puncture refrigerant tubing.**
- **Dispose of properly in accordance with federal or local regulations.**

⚠ WARNING

Safety Hazard!

Failure to follow instructions below could result in death or serious injury and/or property damage.

Only qualified personnel with adequate electrical and mechanical experience must repair the unit. The manufacturer or seller is not responsible for any interpretation or resulting liability.

⚠ CAUTION

Unit Contains R–454B Refrigerant!

Failure to use proper service tools may result in equipment damage or personal injury.

Use only R-454B refrigerant and approved compressor oil.

⚠ WARNING

System Charge!

Failure to follow instructions below could result in abrupt release of system charge and could result in serious injury or property damage.

When opening the suction and liquid line service valve, turn the valve stem counterclockwise only until the stem contacts the rolled edge. Do not apply torque.

⚠ WARNING

Ventilation Required!

Failure to follow instructions below could result in death or serious injury or property damage.

Confirm the area is adequately ventilated before breaking into the system or conducting any hot work.

⚠ WARNING

Live Electrical Components!

Failure to follow all electrical safety precautions when exposed to live electrical components could result in death or serious injury.

When it is necessary to work with live electrical components, have a qualified licensed electrician or other individual who has been properly trained in handling live electrical components perform these tasks.

⚠ WARNING

Safety Hazard!

Failure to follow instructions below could result in death or serious injury or property damage.

This unit is not to be used by persons (including children) with reduced physical, sensory, or mental capabilities, or lack of experience and knowledge, unless they have been given supervision or instruction concerning the use of the appliance by a person responsible for their safety.

Do not allow children to play or climb on the unit or to clean or maintain the unit without supervision.

⚠ CAUTION

Brazed Joints!

Failure to follow instructions below could result in minor to moderate injury or equipment damage.

When using existing refrigerant lines, verify all joints are brazed and not soldered.

⚠ CAUTION

Hot Surface!

Failure to follow instructions below could result in minor to severe burns.

Do not touch top of compressor. It may be hot.

⚠ WARNING

Cancer and Reproductive Harm!

This product can expose you to chemicals, including lead, which are known to the State of California to cause cancer and birth defects or other reproductive harm. For more information go to www.P65Warnings.ca.gov.

⚠ WARNING

Ventilation Required!

Failure to follow instructions below could result in death or serious injury or property damage.
Confirm the area is adequately ventilated before breaking into the system or conducting any hot work.

Note: *The manufacturer recommends installing only approved matched indoor and outdoor systems. All of the manufacture's split systems are AHRI rated only with TXV/EEV indoor systems. Some of the benefits of installing approved matched indoor and outdoor split systems are maximum efficiency, optimum performance and the best overall system reliability.*

Operating Range

Table 1. Operating range

Mode	Model	Operating Range
Cooling	1.5 – 5 Ton	55°F – 120°F
Heating	1.5 – 5 Ton	0°F – 66°F

Piping Guidelines

Piping material, pipe routing, and installation shall include protection from physical damage in operation and service, and be in compliance with national and local codes and standards. All field joints shall be accessible for inspection prior to being covered or enclosed. Install of pipe work shall be kept to a minimum. That provisions shall be made for expansion and contraction of long runs of piping.

Unit Dimensions and Weights

Table 2. Unit dimensions and weight

Models	H x D x W (in.)	Weight[(a)] (lbs)
N5HP5018A	33 x 30 x 33	174
N5HP5024A	33 x 30 x 33	174
N5HP5030A	33 x 30 x 33	174
N5HP5036A	33 x 34 x 34	199
N5HP5042A	45 x 34 x 34	250
N5HP5048A	45 x 34 x 34	250
N5HP5060A	45 x 34 x 34	251

(a) Weight values are estimated uncrated.

Figure 1. Unit dimensions

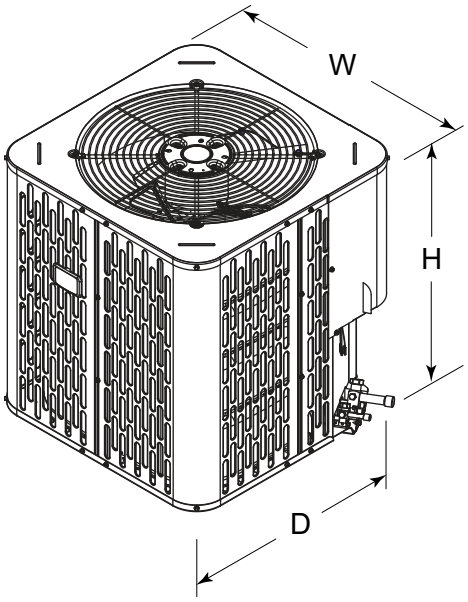

When mounting the outdoor unit on a roof, be sure the roof will support the units weight.

Properly selected isolation is recommended to alleviate sound or vibration transmission to the building structure.

Refrigerant Piping Limits

- The maximum TOTAL length of refrigerant lines from outdoor to indoor unit should NOT exceed 150 feet (including lift).
- The maximum vertical change should not exceed 50 feet.
- Service valve connection diameters are shown in "Refrigerant Line Considerations," p. 9.

Note: *For other line lengths, See Refrigerant Piping Manual for Small Split Cooling and Heat Pump Systems — Application Guide, (SS-APG006*-EN).*

Figure 2. Refrigerant total line length limit

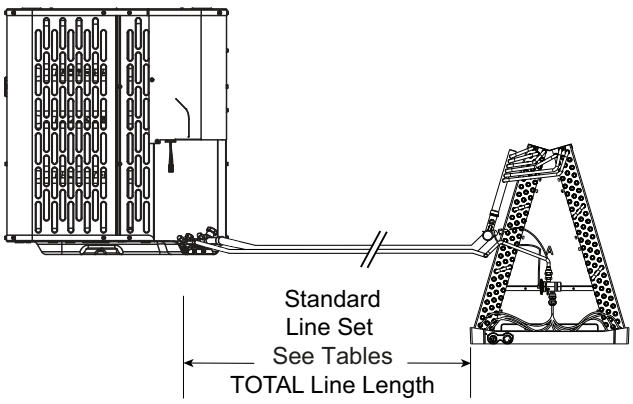

Figure 3. Refrigerant piping vertical change limit

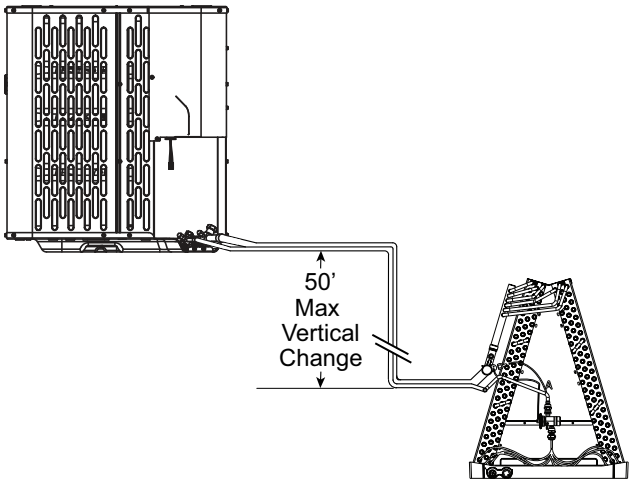

Figure 4. Refrigerant piping vertical change limit

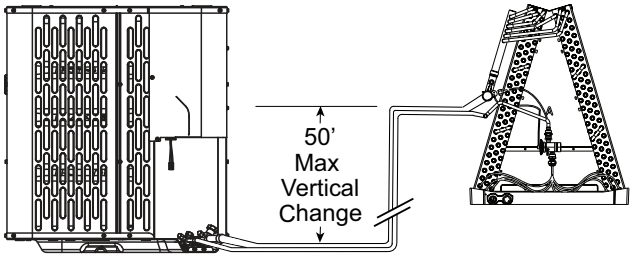

High Voltage

Power Supply

⚠ WARNING

Live Electrical Components!

Failure to follow all electrical safety precautions when exposed to live electrical components could result in death or serious injury.
When it is necessary to work with live electrical components, have a qualified licensed electrician or other individual who has been properly trained in handling live electrical components perform these tasks.

- Use a high-voltage power supply to match the equipment nameplate.
- Install power wiring per national, state, and local codes.
- Follow the unit wiring diagram on the inside of the control box cover and the IOM document included with the unit.

Figure 5. Nameplate location

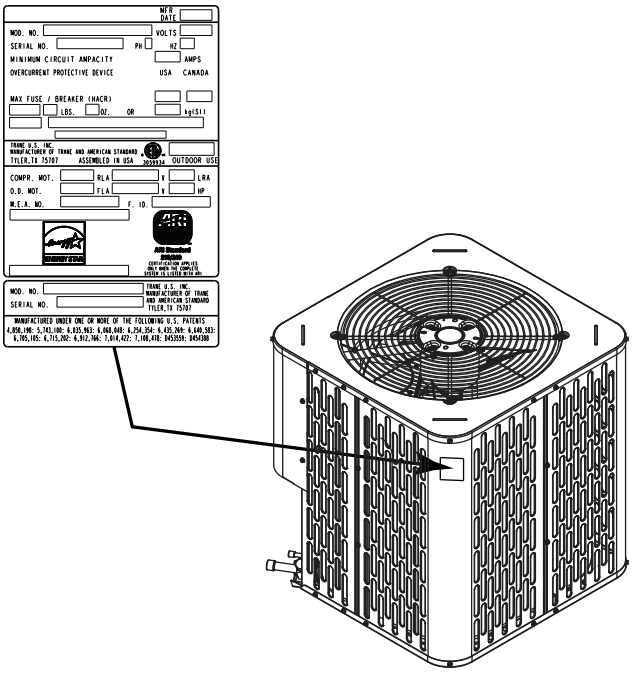

Disconnect Switch

Install a separate disconnect switch at the outdoor unit.

For high-voltage connections, flexible electrical conduit is recommended when vibration transmission may create noise within the structure.

Figure 6. High voltage disconnect switch

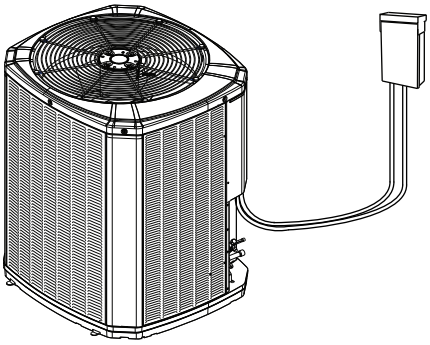

Ground

⚠ WARNING

Safety Hazard!

Failure to follow instructions below could result in death or serious injury, and property damage.
Confirm the cabling is protected from wear and tear, corrosion, excessive pressure, vibration, sharp edges, and any other adverse environmental effects.

Ground the outdoor unit according to national, state, and local code requirements.

Cold Climate Considerations

Note: *It is recommended that these precautions be taken for units being installed in areas where snow accumulation and prolonged below freezing temperatures occur.*

- Units should be elevated 3 to 12 inches above the pad or rooftop, depending on local weather. This additional height will allow drainage of snow and ice melted during defrost cycle prior to its refreezing. Ensure that drain holes in unit base pan are not obstructed preventing draining of defrost water.
- If possible, avoid locations that are likely to accumulate snow drifts. If not possible, a snow drift barrier should be installed around the unit to prevent a build-up of snow on the sides of the unit.

Unit Preparation

Prepare the Unit for Installation

1. Check for damage and report promptly to the carrier any damage found to the unit.
2. To remove the unit from the pallet, remove tabs by cutting with a sharp tool.

Setting the Unit

Pad Installation

When installing the unit on a support pad, such as a concrete slab, consider the following:

- The pad should be at least 1-inch larger than the unit on all sides.
- The pad must be separate from any structure.
- The pad must be level.
- The pad should be high enough above grade to allow for drainage.
- The pad location must comply with National, State, and Local codes.

Refrigeration

Refrigerant Line Considerations

Table 3. Refrigerant line and service valve connection sizes

Model	Rated Line Sizes		Service Valve Connection Sizes	
	Vapor Line	Liquid Line	Vapor Line Connection	Liquid Line Connec-tion
N5HP5018A	3/4	5/16	3/4	5/16
N5HP5024A	3/4	5/16	3/4	5/16

Table 3. Refrigerant line and service valve connection sizes (continued)

Model	Rated Line Sizes		Service Valve Connection Sizes	
	Vapor Line	Liquid Line	Vapor Line Connection	Liquid Line Connec-tion
N5HP5030A	3/4	5/16	3/4	5/16
N5HP5036A	3/4	5/16	3/4	5/16
N5HP5042A	7/8	5/16	7/8	5/16
N5HP5048A	7/8	5/16	7/8	5/16
N5HP5060A	7/8	5/16	7/8	5/16

Table 4. Alternate refrigerant line and service valve connection sizes

Model	Rated Line Sizes		Service Valve Connection Sizes	
	Vapor Line	Liquid Line	Vapor Line Connec-tion	Liquid Line Connec-tion
N5HP5018A	5/8	3/8	3/4	5/16
N5HP5024A	5/8	3/8	3/4	5/16
N5HP5030A	5/8	3/8	3/4	5/16
N5HP5036A	5/8	3/8	3/4	5/16
N5HP5042A	3/4	3/8	7/8	5/16
N5HP5048A	3/4	3/8	7/8	5/16
N5HP5060A	3/4	3/8	7/8	5/16

Factory Charge

The outdoor condensing units are factory charged with the system charge required for the outdoor condensing unit, fifteen (15) ft. of tested connecting line, and the nominal rated indoor evaporative coil match. Always verify proper system charge via subcooling (TXV/EEV) or superheat (fixed orifice) per the unit nameplate.

Required Refrigerant Line Length

Determine required line length and lift. You will need this to determine the subcooling charging corrections later in the installation process.

Total Line Length = _____Ft.

Total Vertical Change (lift) = _____Ft.

Figure 7. Required refrigerant line length

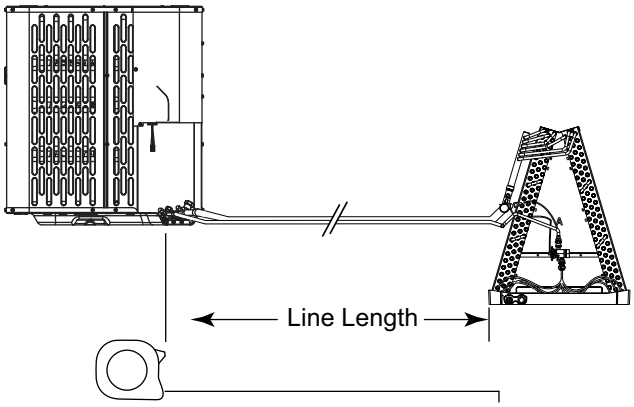

Line Insulation

Important: *The vapor line must always be insulated. Do not allow the liquid line and vapor line to come in direct (metal-to-metal) contact.*

Figure 8. Refrigerant line insulation

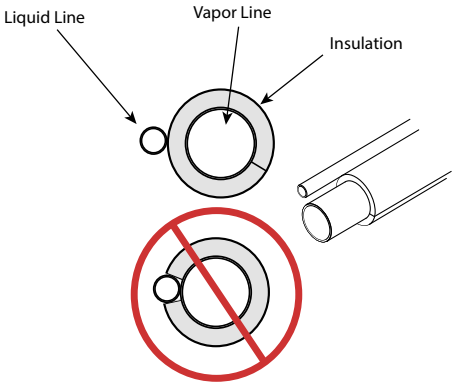

Figure 9. Isolation from joist/rafter

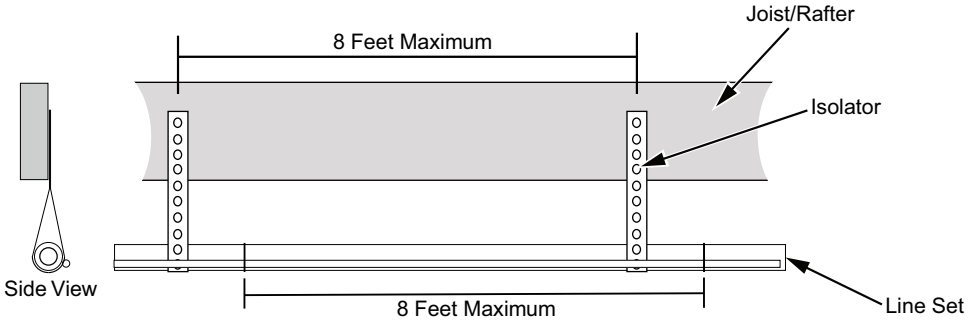

Line Routing

Important: *Take precautions to prevent noise within the building structure due to vibration transmission from the refrigerant lines.*

Comply with national, state, and local codes when isolating line sets from joists, rafters, walls, or other structural elements.

For example:

- Use isolation hangers when securing refrigerant lines to floor joists or other structural framing.
- Use isolation hangers when routing refrigerant lines through stud spaces or enclosed ceilings.
- Insulate and isolate refrigerant lines where they pass through walls or sills.
- Isolate the lines from all ductwork.
- Minimize the number of 90º turns.

Secure the vapor line from joists using isolators every 8 feet. Secure the liquid line directly to the vapor line using tape, wire, or other appropriate method every 8 feet.

Figure 10. Isolation in wall spaces

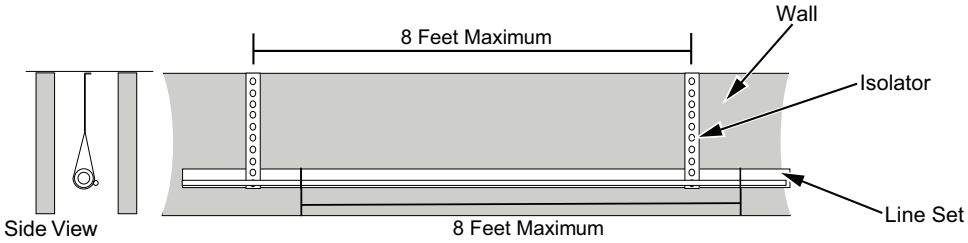

Figure 11. Isolation through wall

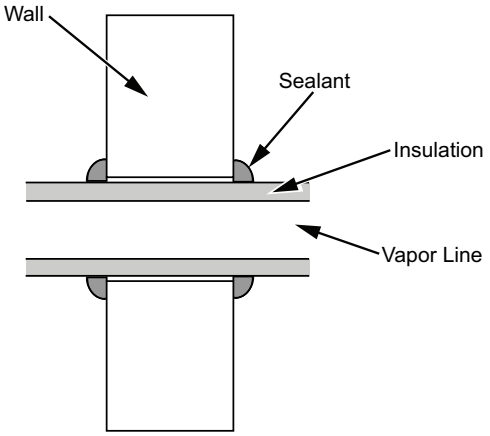

Figure 12. Incorrect lineset installation

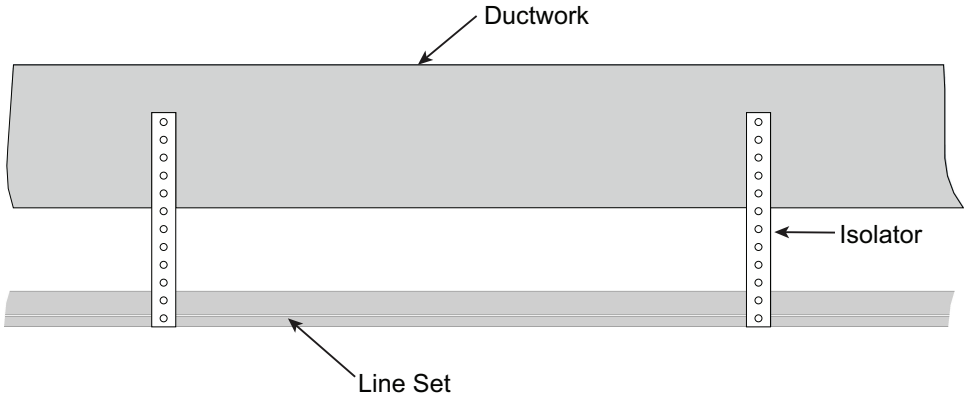

Important: *Do not hang linesets from ductwork.*

Line Brazing

1. Remove caps or plugs. Use a deburing tool to debur the pipe ends. Clean both internal and external surfaces of the tubing using an emery cloth.
2. Remove the pressure tap cap and valve cores from both service valves.
3. Purge the refrigerant lines and indoor coil with dry nitrogen.

Note: *A2L equipment shall have red marked service ports and pipes through which refrigerant is serviced.*

4. Wrap a wet rag around the valve body to avoid heat damage and continue the dry nitrogen purge.
   a. Braze the refrigerant lines to the service valves.
   b. For units shipped with a field-installed external drier, check liquid line filter driers directional flow arrow to confirm correct direction of refrigeration flow (away from outdoor unit and toward evaporator coil) as illustrated. Braze the filter drier to the liquid line.
   c. Continue the dry nitrogen purge. Do not remove the wet rag until all brazing is completed.

Important: *Remove the wet rag before stopping the dry nitrogen purge.*

Notes:

- *Install the drier into the liquid line.*
- *Precautions should be taken to avoid heat damage to the basepan during brazing. It is recommended to keep the flame directly off the basepan.*

5. Replace the pressure tap valve cores and plastic tabs after the service valves have cooled.

Figure 13. Removal of caps or plugs from pipe ends

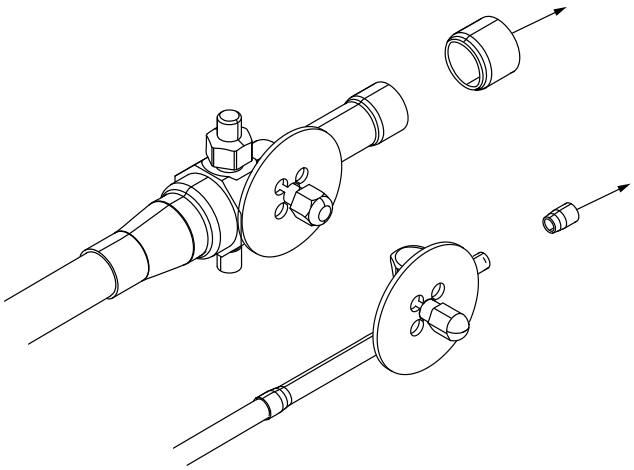

Figure 14. Removal of pressure cap and valve cores from service valves

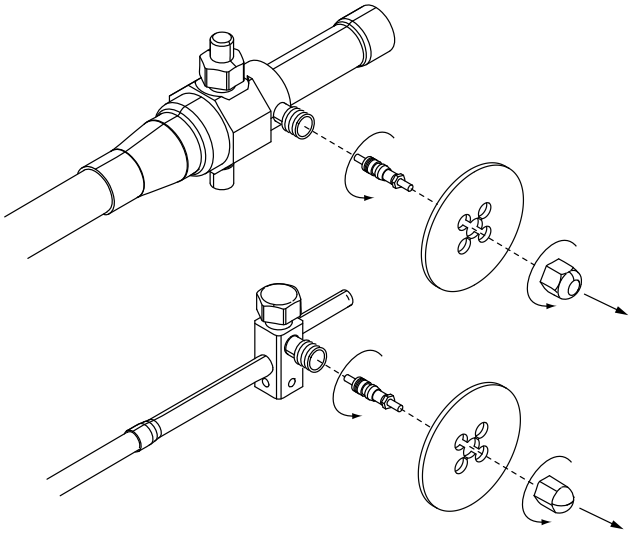

Figure 15. Purging of refrigerant lines

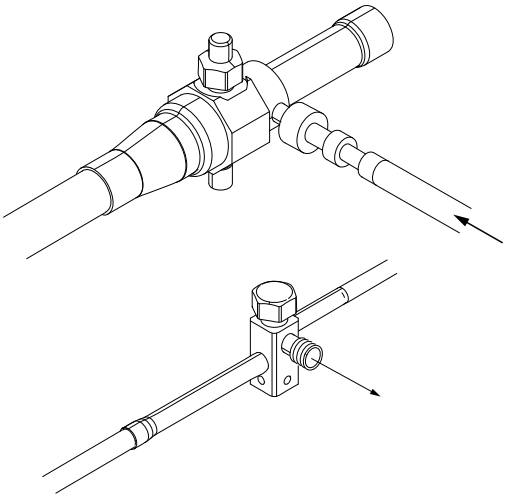

Figure 16. Wrapping of wet rag

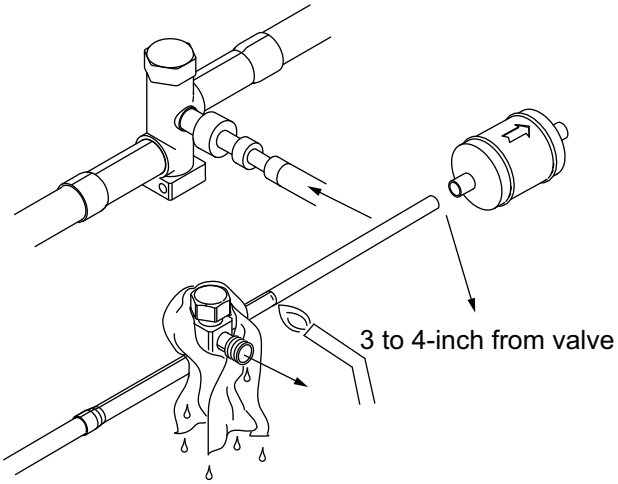

Figure 17. Re-installation of pressure valve cores and plastic tabs

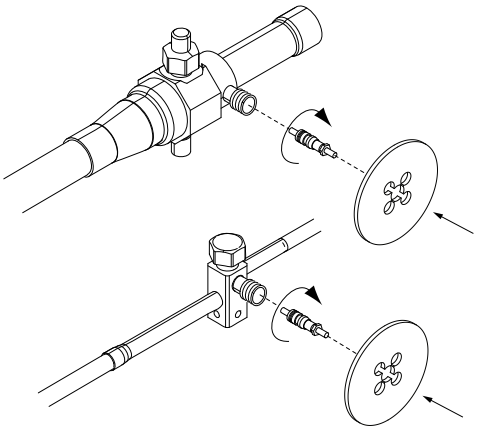

Refrigerant Line Leak Check

Check For Leaks

After completion of field piping for split systems, the field pipework shall be pressure tested with nitrogen and then vacuum tested prior to refrigerant charging.

Important:

1. *Under no circumstances shall potential sources of ignition be used in the searching for or detection of refrigerant leaks.*
2. *The following leak detection methods are deemed acceptable for all refrigerant systems:*
   a. *Electronic leak detectors calibrated for R-454B (with a sensitivity of 5 grams/ year).*
   b. *Bubble method.*
3. *The outdoor unit should not be tested higher than 450 psig for servicing or component replacement. The indoor unit and line sets should be tested to the max pressure specified on the outdoor or indoor unit nameplate. The service valves should be closed when pressure testing the evaporator coil and linesets to separate the outdoor unit from the indoor unit.*

Figure 18. Refrigerant line leak check

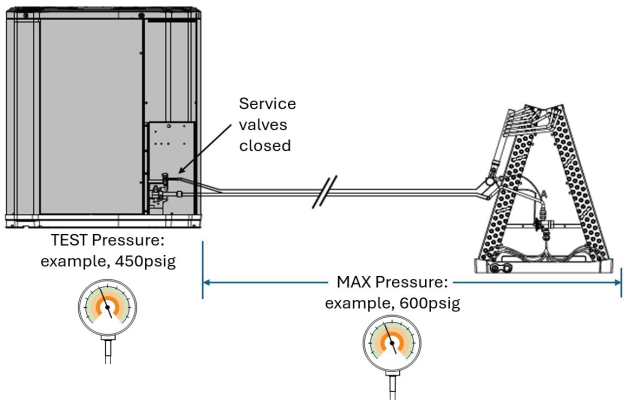

1. **Final Pressure Check:**

   Isolate the outdoor unit from the evaporator coil and linesets using the service valves. Pressurize the evaporator coil and linesets to the max pressure specified on the outdoor or indoor unit nameplate for a minimum of 60 minutes. Do not add additional refrigerant or test gas after reaching the evaporator coil specified pressure. The system should show no loss of pressure once pressurized. Once the pressure test is complete follow the steps for evacuation.

2. **Preliminary Pressure Check (*Optional):**

   Pressurize the refrigerant lines and evaporator coil to 150 psig using dry nitrogen. Check for leaks by using a soapy solution or bubbles at each brazed location. Remove pressure and repair any leaks before continuing.

Evacuation and Servicing

Evacuate the Refrigerant Lines and Indoor Coil

Important: *Do not open the service valves until the refrigerant lines and indoor coil leak check and evacuation are complete.*

1. Evacuate until the micron gauge reads no higher than 350 microns, then close off the valve to the vacuum pump.

Figure 19. Observe micron gauge reading

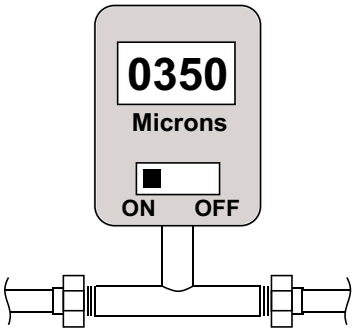

2. Observe the micron gauge. Evacuation is complete, if the micron gauge does not rise above 500 microns in 1 minute and 1500 microns in 10 minutes.

Figure 20. Stopwatch

3. Once evacuation is complete, blank off the vacuum pump and micron gauge, and close the valve on the manifold gauge set.

Servicing

- If repairs are required after the system is charged, safely remove or isolate the refrigerant and purge the section needing repair with nitrogen or oxygen-free nitrogen before opening the circuit.
- The refrigerant charge shall be recovered into the correctly marked recovery cylinders.
- Keep the vacuum pump outlet away from potential ignition sources, and make sure ventilation is available.
- Before recharging the system, pressure-test it with the appropriate purging gas. After charging and before commissioning, perform a leak test. Conduct a follow-up leak test before leaving the site.
- Use only appropriate refrigerant recovery cylinders. Have enough cylinders available to hold the full system charge. Use only cylinders designated and labeled for the recovered refrigerant. Cylinders must include a pressure-relief valve and associated shut-off valves in good working order.
- Have a set of calibrated weighing scales available and in good working order. Use hoses with leak-free disconnect couplings, and keep them in good condition. Confirm that any associated electrical components are sealed.
- Return the recovered refrigerant to the refrigerant supplier in the correct recovery cylinder. Do not mix refrigerants.
- If compressors or compressor oils are removed, evacuate them to an acceptable level to confirm that no A2L refrigerant remains in the lubricant.

Service Valves

Open the Gas Service Valve First

Important: *Complete the leak check and evacuation must before opening the service valves.*

Note: *Do not vent refrigerant gases into the atmosphere.*

1. Remove the valve stem cap.
2. Using an adjustable wrench, turn the valve stem 1/4 turn counterclockwise to the fully open position.
3. Replace the valve stem cap to prevent leaks. Finger-tighten plus an additional 1/6 turn.

Note: *Service valves may be ball or angle style.*

Figure 21. Gas service valve

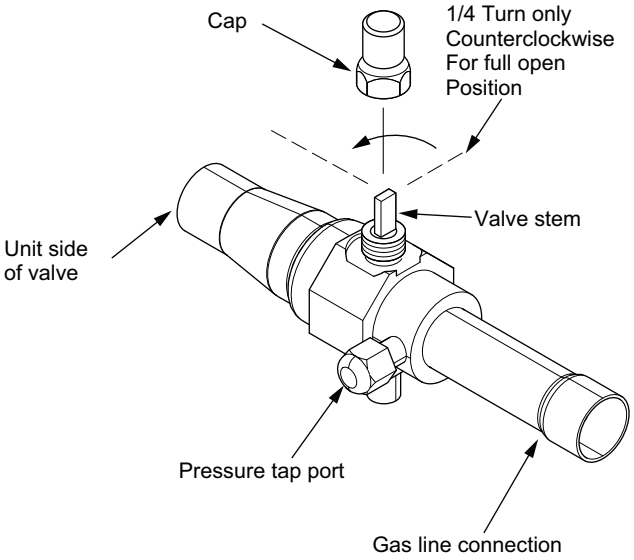

Open the Liquid Service Valve Second

⚠ WARNING

System Charge!

Failure to follow instructions below could result in abrupt release of system charge and could result in serious injury or property damage.

When opening the suction and liquid line service valve, turn the valve stem counterclockwise only until the stem contacts the rolled edge. Do not apply torque.

Important: *Leak check and evacuation must be completed before opening the service valves.*

1. Remove the service valve cap.
2. Fully insert a 3/16-inch hex wrench into the stem and back out counterclockwise until the valve stem just touches the rolled edge (approximately five turns).
3. Replace the valve cap to prevent leaks. Finger-tighten plus an additional 1/6 turn.

Figure 22. Liquid service valve

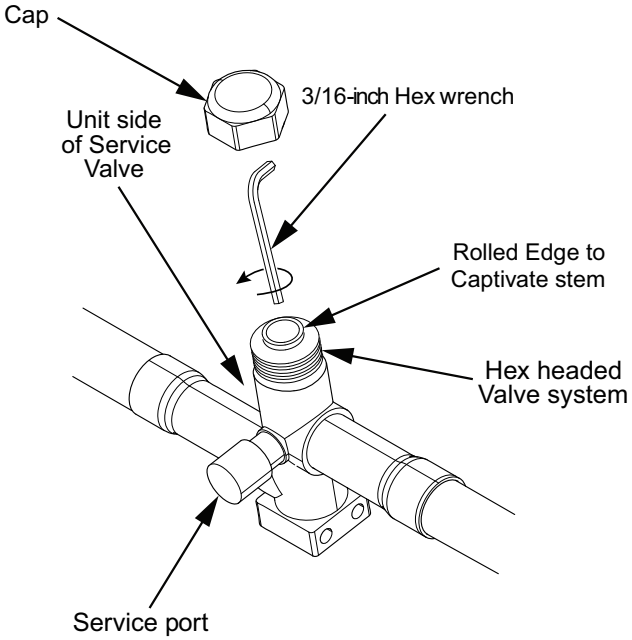

Electrical

Maximum Wire Length

The following table defines the maximum total length of low voltage wiring from the outdoor unit, to the indoor unit, and to the thermostat.

Table 5. Low voltage maximum wire length

24 Volts	
Wire Size	**Maximum Wire Length (ft.)**
18 AWG	150
16 AWG	225
14 AWG	300

Heat Pumps N5HP5 Low Voltage Connection Diagrams

Figure 23. Single-stage HP – A5AH6

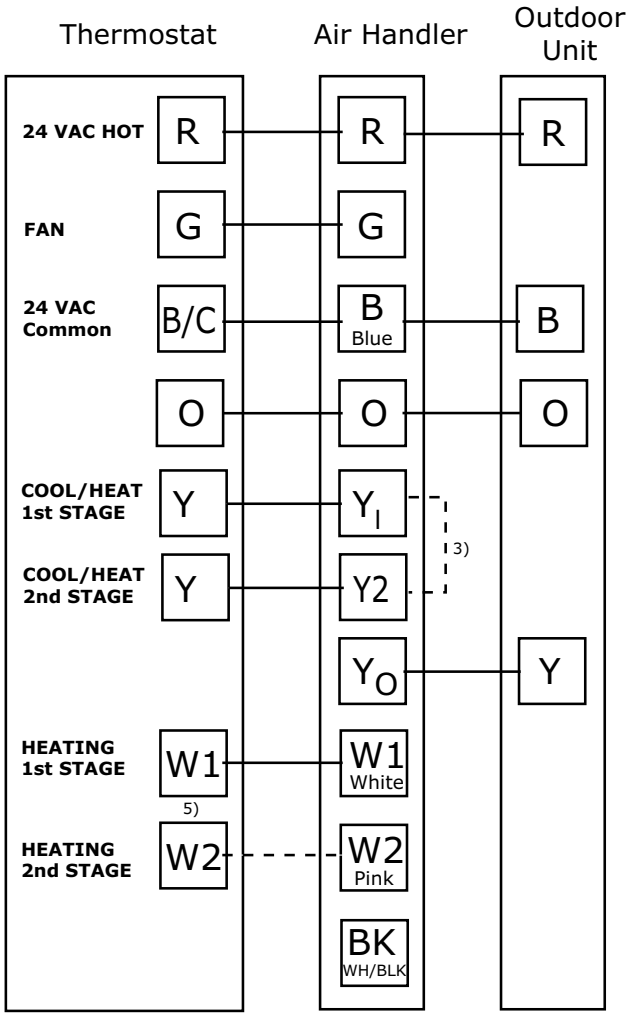

1. Units with pigtails require wirenuts for connections.
2. Cap all unused wires.
3. When BK is used, do not connect Y2 at the air handler.
4. When BK is used, cut the jumper between R and BK on the control board. See indoor wiring schematic for details.
5. In AC systems, for multiple stages of electric heat, jumper W1 and W2 together if comfort control has only one stage of heat.

Figure 24. Single-stage HP – A5AH4

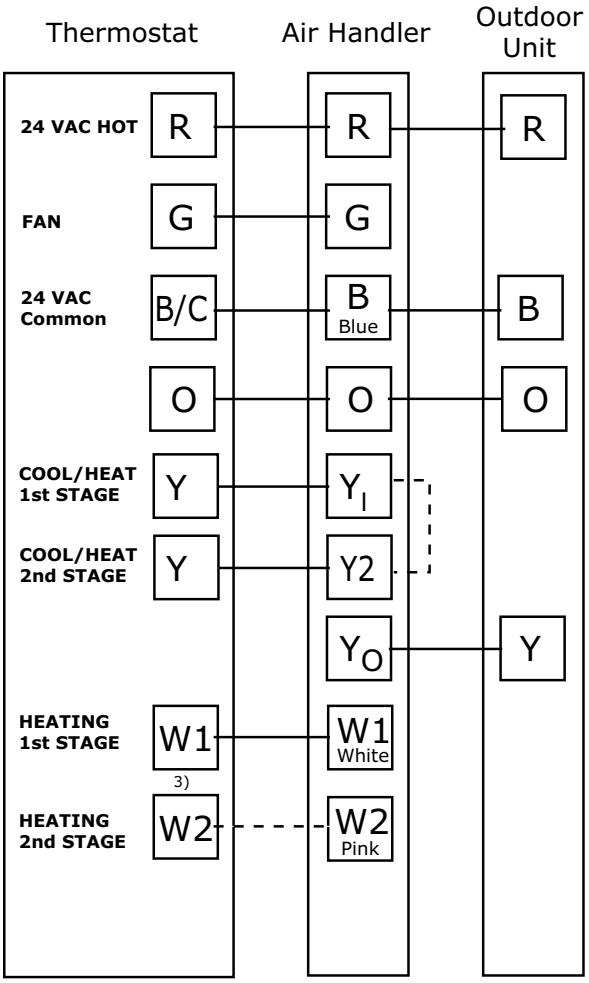

1. Units with pigtails require wirenuts for connections.
2. Cap all unused wires.
3. In AC systems for multiple stages of electric heat, jumper W1 and W2 together if comfort control has only one stage of heat.

Figure 25. Single-stage AC with 5TAM5

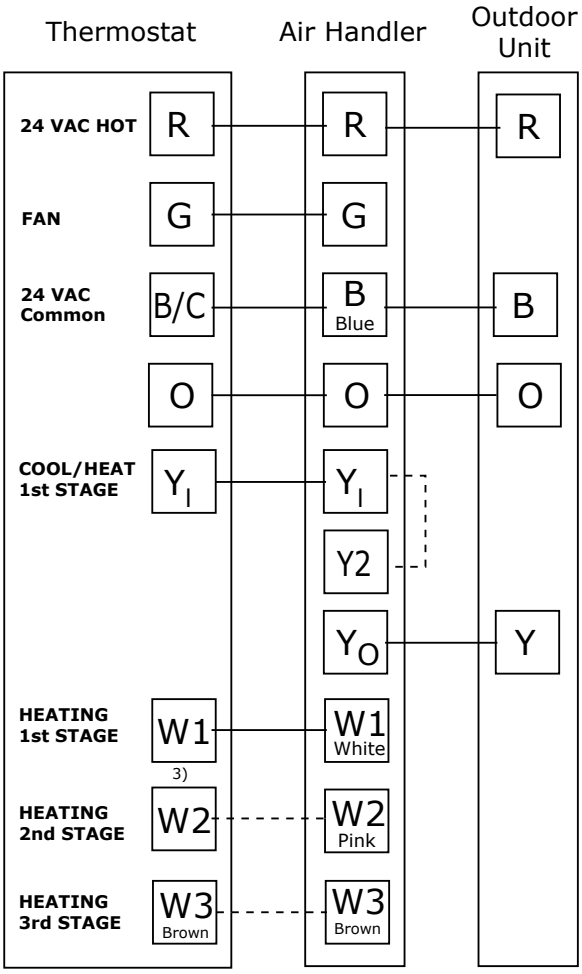

1. Units with pigtails require wirenuts for connections.
2. Cap all unused wires.
3. In AC systems for multiple stages of electric heat, jumper W1 and W2 together if comfort control has only one stage of heat.

Figure 26. Typical AC or or heat pump with a furnace

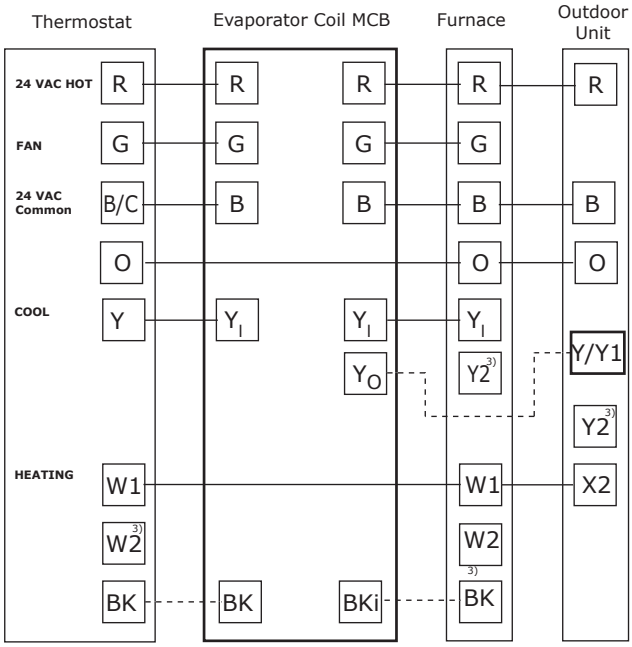

1. Units with pigtails require wirenuts for connections. Cap all unused wires.
2. For 24V control, connect factory supplied harness to circuit board at evaporator. Complete all other wiring connections at the furnace.
3. For 2 stage systems, connect W2 to W2 and Y2 to Y2.

Figure 27. Single-stage +TSTAT, HP, A5AH6

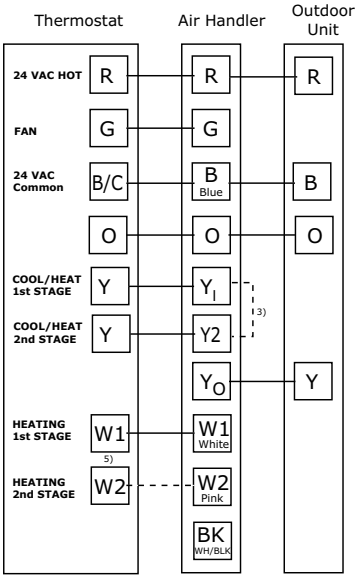

1. Units with pigtails require wirenuts for connections.
2. Cap all unused wires.
3. When BK is used, do not connect Y2 at the air handler.
4. When BK is used, cut the jumper between R and BK on the control board. See indoor wiring schematic for details.
5. In AC systems, for multiple stages of electric heat, jumper W1 and W2 together if comfort control has only one stage of heat.

Figure 28. Single-stage +TSTAT, HP, A5AH4

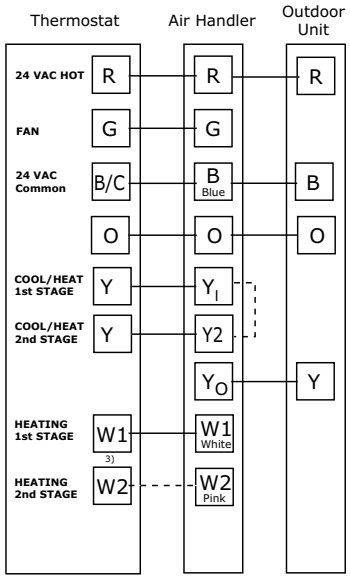

1. Units with pigtails require wirenuts for connections.
2. Cap all unused wires.
3. In AC systems for multiple stages of electric heat, jumper W1 and W2 together if comfort control has only one stage of heat.

Figure 29. Single-stage +TSTAT, HP, 5TAM5

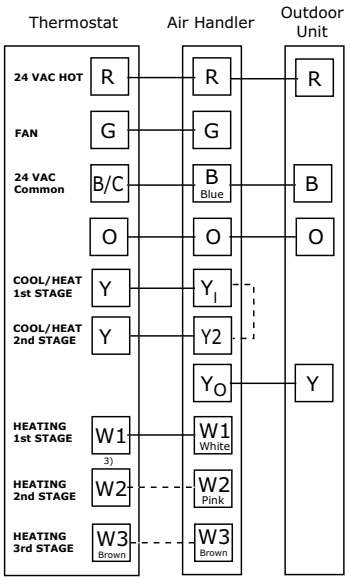

1. Units with pigtails require wirenuts for connections.
2. Cap all unused wires.
3. In AC systems, for multiple stages of electric heat, jumper W1 and W2 together if comfort control has only one stage of heat.

Mitigation Board Guidelines

- The approved ID/OD combination will provide sufficient safe ventilation in case of a leak.
- Refer to Indoor Unit Installer's Guide for correct specifications on indoor unit install.
- All systems require mitigation boards so an altitude adjustment factor may be required.
- Mitigation Control Board needs to be included in an A2L System.

Defrost Control - All Models Except 036

Defrost controls have a selectable termination temperature. As shipped, defrost will terminate at 47°F. For a higher termination temperature, cut Jumper J2 to achieve 70°F. See Service Facts shipped in the outdoor unit for more information.

Pin Identification on J5

See the below illustration.

1. TEST_COMMON (Shorting to FRC_DFT causes the control to initiate Forced Defrost. Leaving this pin open results in the normal mode of operation.)
2. FRC_DFT = Forced Defrost (Short TEST_COMMON to this pin for two (2) seconds to initiate a forced defrost. Remove the short after defrost initiates.)

Figure 30. Defrost board detail

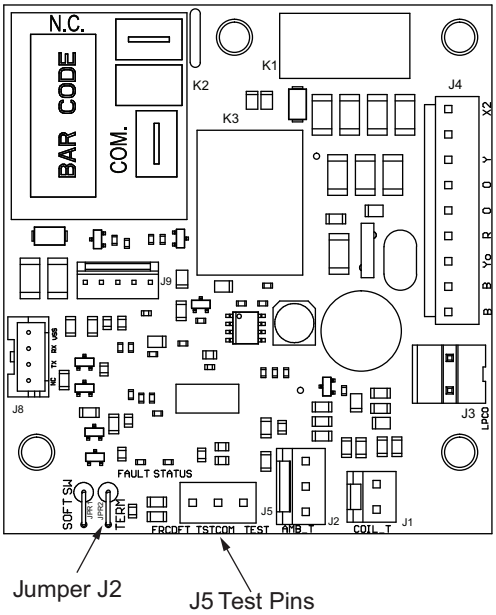

Defrost Control Checkout

Normal operation requires:

- Status LED on board flashing 1 time/second in standby or 2 times/second with a call for heating or cooling.
- 24V AC between R and B.
- 24V AC between Y, Y0 and B with unit operating.
- Defrost initiation when FRC_DFT pin is shorted to TEST_COMMON pin.

If a defrost control problem is suspected, refer to the service information in control box.

Defrost Control - 036 Model Only

Pin Identification

Defrost controls have a selectable termination temperature. As shipped, defrost will terminate at 47°F. For a higher termination temperature, cut Jumper J2 to achieve 70°F when at or below 30°F ambient. See Service Facts shipped in the outdoor unit for more information.

See the Figure 31, p. 20

1. TEST_COMMON (Shorting any of the other pins to this pin causes the function of the other pin to be executed. Leaving this pin open results in the normal mode of operation.)
2. TST = Test (Shorting TEST_COMMON to this pin speeds up all defrost board timings.)
3. FRC_DFT = Forced Defrost (Short TEST_COMMON to this pin for two (2) seconds to initiate a forced defrost. Remove the short after defrost initiates.)

Defrost Control Checkout

Normal operation requires:

- LED on board flashing 1 time/second.
- 24V AC between R and B.
- 24V AC between Y and B with unit operating.
- Defrost initiation when FRC_DFT pin is shorted to TEST_COMMON pin.

If a defrost control problem is suspected, see the service information in control box.

Table 6. Defrost termination temperatures

	Outdoor Temperature	Termination Temperature
As Shipped	>22°F	47°F
—	10°F to 22°F	ODT + 25°F
—	6°F to 10°F	35°F
Cut Jumper 2	>30°F	47°F
—	6°F to 30°F	70°F
All	< 6°F	12 min. or 35°F every 3 hrs.

Figure 31. Defrost board detail

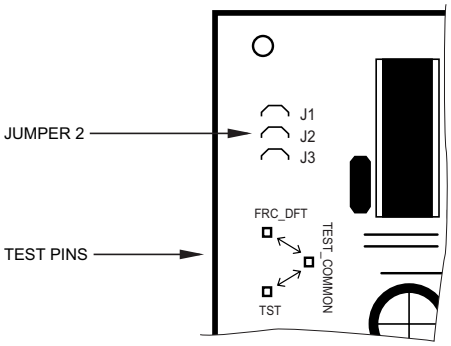

High Voltage

High Voltage Power Supply

⚠ WARNING

Live Electrical Components!

Failure to follow all electrical safety precautions when exposed to live electrical components could result in death or serious injury.

When it is necessary to work with live electrical components, have a qualified licensed electrician or other individual who has been properly trained in handling live electrical components perform these tasks.

The high voltage power supply must agree with the equipment nameplate.

Power wiring must comply with national, state, and local codes.

Follow instructions on unit wiring diagram located on the inside of the control box cover and in the Installation, Operation, and Maintenance (IOM) document included with the unit.

Figure 32. Nameplate location

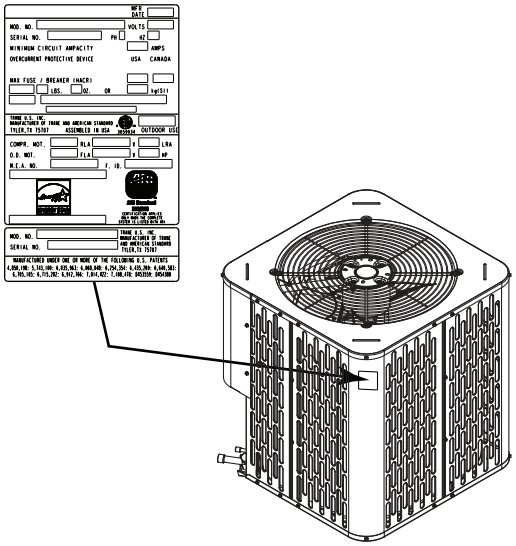

High Voltage Disconnect Switch

Install a separate disconnect switch at the outdoor unit.

For high voltage connections, flexible electrical conduct is recommended whenever vibration transmission may create a noise problem within the structure.

High Voltage Ground

Ground the outdoor unit per National, State, and Local code requirements.

⚠ WARNING

Safety Hazard!

Failure to follow instructions below could result in death or serious injury, and property damage.

Confirm the cabling is protected from wear and tear, corrosion, excessive pressure, vibration, sharp edges, and any other adverse environmental effects.

System Start-Up

1. Verify that “Line Brazing,” p. 11 through “High Voltage,” p. 20 have been completed.
2. Turn on disconnect(s) to apply power to the indoor and outdoor units.
3. Wait one (1) hour before starting the unit if compressor crankcase heater accessory is used and the outdoor ambient is below 70º F.
4. Set system mode to COOL, and call for capacity (if conditions are correct for cooling).

System Charge Adjustment

Temperature Measurements

Check the outdoor temperatures.

Subcooling (in cooling mode) is the only recommended method of charging above 55º F ambient outdoor temperature. See "Subcooling Charging in Cooling (Above 55º F Outdoor Temp.)," p. 22 for outdoor temperatures above 55º F.

Figure 33. Outdoor temperature

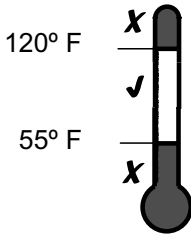

For outdoor temperatures below 55º F, see "Subcooling Charging in Cooling (Above 55º F Outdoor Temp.)," p. 22

Figure 34. Outdoor temp 2

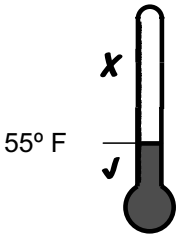

Note: *It is important to return in the spring or summer to accurately charge the system in the cooling mode when outdoor ambient temperature is above 55º F.*

For best results the indoor temperature should be kept between 70º F to 80º F.

Figure 35. Indoor temp

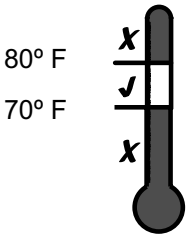

Note: *Subcooling specifications other than OD nameplate.*

Table 7. Subcooling specifications - models N5HP5024 and N5HP5030

OD Model	ID Model (including coil-furnace combinations)	Subcooling
N5HP5024	5TXCA002, 5TXCB003, 5TXCB004	9º F
N5HP5030	5TXCA002, 5TXCB003, 5TXCB004	9º F

Subcooling Charging in Cooling (Above 55º F Outdoor Temp.)

1. Determine the refrigerant line total length and lift.

   Total Line Length = _____ Ft.

   Vertical Change (Lift) = _____ Ft.

   Figure 36. Refrigerant line total length and lift

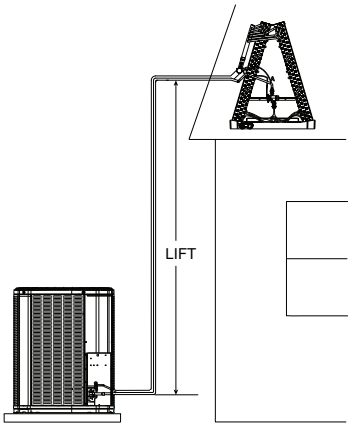

2. Determine the final subcooling value using total line length and lift measured in Step 1 and the tables below.

   Table 8. Subcool charging corrections table (for line length and rise) - models 018, 024A, and 030A

018A, 024A, 030A			
Vapor Line	**Liquid Line**	**Liquid Line**	**Lift**
5/8	5/16	125	50
3/4	5/16	100	50
5/8	3/8	150	50
3/4	3/8	100	50
Note:			
Ratings/Primary			
Legacy Lineset			

Table 9. Subcool charging corrections table (for line length and rise) - model 036A

036A			
Vapor Line	**Liquid Line**	**Liquid Line**	**Lift**
5/8	5/16	150	50
3/4	5/16	125	50
5/8	3/8	150	50
3/4	3/8	125	50
Note:			
Ratings/Primary			
Legacy Lineset			

Table 10. Subcool charging corrections table (for line length and rise) - model 042A

042A			
Vapor Line	**Liquid Line**	**Liquid Line**	**Lift**
3/4	5/16	125	50
7/8	5/16	125	50
3/4	3/8	125	50
7/8	3/8	125	50
Note:			
Ratings/Primary			
Legacy Lineset			

Table 11. Subcool charging corrections table (for line length and rise) - model 048A

048A			
Vapor Line	**Liquid Line**	**Liquid Line**	**Lift**
3/4	5/16	125	50
7/8	5/16	125	50
3/4	3/8	150	50
7/8	3/8	125	50
Note:			
Ratings/Primary			
Legacy Lineset			

Table 12. Subcool charging corrections table (for line length and rise) - model 060A

060A			
Vapor Line	**Liquid Line**	**Liquid Line**	**Lift**
3/4	5/16	125	50
7/8	5/16	125	50
3/4	3/8	150	50

Table 12. Subcool charging corrections table (for line length and rise) - model 060A (continued)

060A			
Vapor Line	**Liquid Line**	**Liquid Line**	**Lift**
7/8	3/8	125	50
Note:			
Ratings/Primary			
Legacy Lineset			

Table 13. R-454B refrigerant charging chart

Liquid Temp (°F)	Design Subcooling (°F)						
	8	9	10	11	12	13	14
	Liquid Gauge Pressure (PSI)						
55	170	172	175	178	181	184	187
60	184	187	190	194	197	200	203
65	200	203	206	210	213	217	220
70	217	220	223	227	230	234	238
75	234	238	241	245	249	252	256
80	252	256	260	264	268	272	276
85	272	276	280	284	288	292	297
90	292	297	301	305	309	314	318
95	314	318	323	327	332	336	341
100	336	341	346	351	355	360	365
105	360	365	370	375	380	385	390
110	385	390	396	401	406	412	417
115	412	417	422	428	433	439	445
120	439	445	450	456	462	468	474
125	468	474	480	486	492	498	504

Figure 37. Subcool charging chart - models 018A, 024A, 030A, and 036B

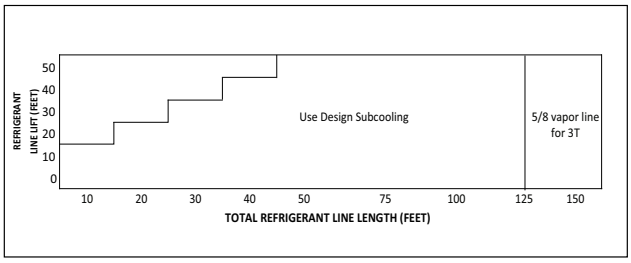

Figure 38. Subcool charging chart - model 042B

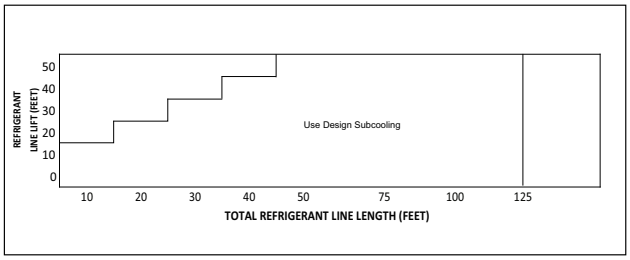

Figure 39. Subcool charging chart - models 048B and 060A

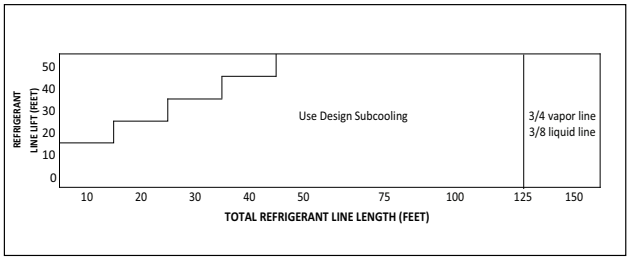

Design Subcooling Value = _____º F

(from nameplate or Service Facts)

Subcooling Correction = _____º F

Final Subcooling Value = _____º F

Charging the Unit

1. Attain proper gauge pressure.

   Using the standard R-454B subcool charging chart, adjust refrigerant level to attain proper gauge pressure.

   Note: *Use bubble point, per the included chart, for calculating subcooling.*

   Add refrigerant in the liquid gauge pressure is lower than the chart value.

   a. Connect gauges to refrigerant bottle and unit are illustrated.

   b. Purge all hoses.

   c. Place refrigerant bottle on a scale and then open bottle.

   d. Stop adding refrigerant when liquid line refrigerant and liquid gauge pressure match the charging chart.

   Notes:

   1. *Recover refrigerant if the liquid gauge pressure is higher than the chart value.*
   2. *Verify that contamination of different refrigerants does not occur when using charging equipment. Cylinders shall be kept in an appropriate position according to the instructions. Verify that the refrigeration system is earthed prior to charging the system with refrigerant.*

Figure 40. Charging the unit

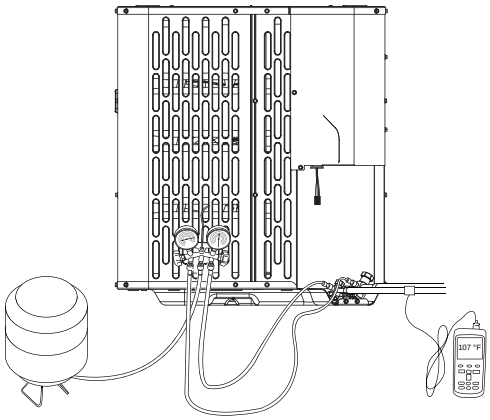

2. Stabilize the system.

   a. Wait 20 minutes for the system condition to stabilize between adjustments.

   Note: *When the liquid line temperature and gauge pressure approximately match the chart, the system is properly charged.*

   b. Remove gauges.

   c. Replace service port caps to prevent leaks. Tighten finger tight plus an additional 1/6 turn.

Figure 41. Stopwatch

3. Record system information for reference. Record system pressures and temperatures after charging is complete.

   Outdoor model number = _____

   Measured Outdoor Ambient = _____ º F

   Measured Indoor Ambient = _____ º F

   Measured Liquid Line Temp = _____ º F

   Measured Suction Line Temp = _____ º F

   Liquid Gauge Pressure = _____ PSI

   Suction Gauge Pressure = _____ PSI

4. Complete the 'Total System Charge' charge rating label below and label located on the outside of the unit with a permanent marker.

a. Charge added at Factory = _____ lb/oz

b. Charge added at install = _____ lb/oz

c. Total System Charge (a + b) = _____ lb/oz

Subcooling Charging Below 55º F Outdoor Temp. (In Heating Only)

The subcooling charging method in cooling is not recommended below 55º F outdoor temperature.

The recommended method of charging at outdoor temperatures below 55º F is weighing in the charge. Return when weather conditions permit charge verification through subcooling.

1. Determine additional charge.

   Note: *The nameplate charge value represents the amount of refrigerant shipped in the outdoor unit and is compatible with 10 feet of AHRI rated refrigerant lines and the smallest AHRI rated coil.*

   Using the method below, find the charge associated with the additional length of tubing above 10 ft. and record it below.

   Weigh-In Method can be used for the initial installation, or anytime a system charge is being replaced. Weigh-In Method can also be used when power is not available to the equipment site or operating conditions (indoor/outdoor temperatures) are not in range to verify with the subcooling charging method.

   Calculating Charge Using the Weigh-In Method

   a. Measure in feet the distance between the outdoor unit and the indoor unit and record on Line 1. Include the entire length of the line from the service valve to the IDU (minus 10 ft).

      Line length (ft) = _____

   b. Enter the charge multiplier.

      Charge multiplier = for 3/8-inch, use 0.47 oz. per foot and for 5/16-inch, use 0.30 oz. per foot

   c. Multiply the total length of refrigerant tubing (Line 1) times the value on Step 1b.

      Record the result on Line 3 of the Worksheet.

      Step a x Step b = _____

   d. This is the amount of refrigerant to weigh-in prior to opening the service valves.

      Refrigerant = _____

2. Stabilize the system by operating for a minimum of 20 minutes.

   At startup, or whenever charge is removed or added, the system must be operated for a minimum of 20 minutes to stabilize before accurate measurements can be made.

Figure 42. Stopwatch

3. Check the liquid line temperature and liquid gauge pressure to obtain a minimum of 10º subcooling in heating mode.

   Measured Liquid Line Temp = _____ º F

   Liquid Gauge Pressure = _____ PSIG

4. Add charge if a minimum of 10º subcooling is not obtained with the nameplate charge plus additional charge previously added.

5. Complete the 'Total System Charge' chart rating label below and label located on the outside of the unit with a permanent marker.

   Note: *Complete the 'Total System Charge' chart when final charging is complete.*

   a. Charge added at Factory = _____ lb/oz

   b. Charge added at install = _____ lb/oz

   c. Total System Charge (a + b) = _____ lb/oz

6. Return to site for adjustment.

   Important: *Return in the spring or summer to accurately charge the system in the cooling mode with outdoor ambient above 55º F.*

Checkout Procedures

Operational and Checkout Procedures

Final phases of this installation are the unit Operational and Checkout Procedures. To obtain proper performance, all units must be operated and charge adjustments made.

Important: *Perform a final unit inspection to be sure that factory tubing has not shifted during shipment. Adjust tubing if necessary so tubes do not rub against each other when the unit runs. Also be sure that wiring connections are tight and properly secured.*

After installation has been completed, it is recommended that the entire system be checked against the following list:

- ☐ Check the refrigerant lines for any leaks.
- ☐ Properly insulate the suction lines and fittings.
- ☐ Properly secure and isolate all refrigerant lines.
- ☐ Seal passages through masonry. If mortar is used, prevent mortar from coming into direct contact with copper tubing.
- ☐ Verify that all electrical connections are tight.
- ☐ Observe outdoor fan during on cycle for clearance and smooth operation.
- ☐ Verify that the indoor coil drain line drains freely. Pour water into drain pan.
- ☐ Verify that the supply registers and return grilles are open and unobstructed.
- ☐ Verify that a return air filter is installed.
- ☐ Verify that the correct airflow setting is used. (Indoor blower motor).
- ☐ Operate complete system in each mode to ensure safe operation.
- ☐ Check the MCB or RDS is operational.

Defrost Control

Defrost Control

The demand defrost control measures heat pump outdoor ambient temperature with a sensor located outside the outdoor coil. A second sensor located on the outdoor coil is used to measure the coil temperature. The difference between the ambient and the colder coil temperature is the difference or delta-T measurement. This delta-T measurement is representative of the operating state and relative capacity of the heat pump system. Measuring the change in delta-T determines the need for defrost. The coil sensor also serves to sense outdoor coil temperature for termination of the defrost cycle.

Defrost controls have a selectable termination temperature. As shipped, defrost will terminate at 47°F. For a higher termination temperature, cut **Jumper J2** to achieve 70°F. See Service Facts shipped in the outdoor unit for more information.

Fault Detection

A fault condition is indicated by the flashing fault LED light on the defrost control board located inside the heat pump control box.

In normal operation, the status LED will flash once each second when idle or twice each second with a call for heating or cooling.

Pin Identification on J5

See Figure 43, p. 27.

1. TEST_COMMON (Shorting to FRC_DFT causes the control to initiate forced defrost. Leaving this pin open results in the normal mode of operation.)
2. FRC_DFT = Forced defrost (Short TEST_COMMON to this pin for 2 seconds to initiate a forced defrost. Remove the short after defrost initiates.)

Figure 43. Defrost control board

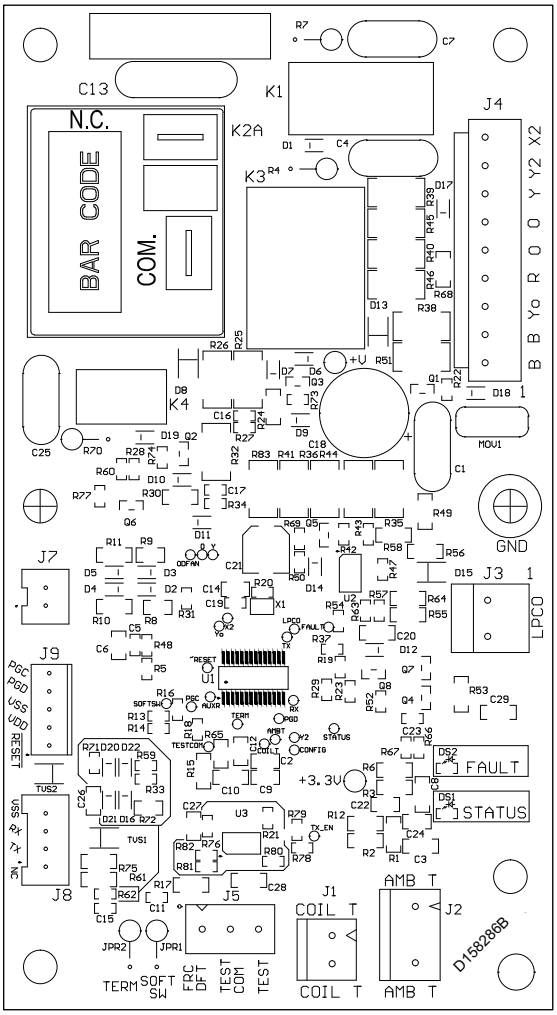

Defrost Control Checkout

Normal operation requires:

1. Status LED on board flashing 1 time/second in stand by or 2 times/second with a call for heating or cooling.
2. 24V AC between R and B.
3. 24V AC between Y, Y0, and B with unit operating.
4. Defrost initiation when FRC_DFT pin is shorted to TEST_COMMON pin.

Test Sensors

Measure the temperature the subject sensor is exposed to. If the sensor is mounted on a tube, place the lead on an Annie A-8 (or equiv.) temperature tester on the same tube near the sensor and insulate the bulb.

Unplug the sensor and measure the resistance with a good quality ohmmeter (Simpson 260 or equiv.). Read the value

as quickly as possible to prevent the meter current from changing the resistance reading.

Using the chart, locate (as close as possible) the actual sensor temperature. The measured resistance should be relatively close to the resistance value shown in the chart.

Table 14. Defrost control thermistor

Temp °F	Temp °C	Thermistor Resistance (ohms)	Volts DC
-15.00	-26.11	135976	2.50
-10.00	-23.33	115112	2.40
-5.00	-20.56	97745	2.29
0.00	-17.78	83247	2.17
5.00	-15.00	71108	2.05
10.00	-12.22	60916	1.93
15.00	-9.44	52333	1.81
20.00	-6.67	45076	1.69
25.00	-3.89	38927	1.56
30.00	-1.11	33703	1.45
35.00	1.67	29253	1.33
40.00	4.44	25452	1.22
45.00	7.22	22198	1.12
50.00	10.00	19405	1.02
55.00	12.78	17002	0.93
60.00	15.56	14930	0.85
65.00	18.33	13138	0.77
70.00	21.11	11586	0.70
75.00	23.89	10238	0.63
80.00	26.67	9065	0.57
85.00	29.44	8043	0.52
90.00	32.22	7150	0.47
95.00	35.00	6368	0.42
100.00	37.78	5682	0.38
105.00	40.56	5079	0.35
110.00	43.33	4548	0.31
115.00	46.11	4079	0.28
120.00	48.89	3665	0.26
125.00	51.67	3298	0.23
130.00	54.44	2972	0.21
135.00	57.22	2683	0.19

Example:

Sensor temp. = 19°F

Measured Resistance = 46K ohms

This sensor is good since the measured value is relatively close to the chart value.

Table 15. Demand defrost quick specs

Compressor	Scroll	Scroll
Mnemonic no CNT	CNT08177	CNT08176
Group nomenclature [a]	D161244G01	D161246G02
Supersedure CNT	07824	07825
Od fan type – PSC/ECM	PSC	ECM
	1-SPD	1-SPD

Table 15. Demand defrost quick specs (continued)

Compressor	Scroll	Scroll
Defrost enabled: Y = on coil temperature	≤52 °F [b]	≤52 °F
Defrost permit: Y = on coil temperature	≤32 °F	≤32 °F
Min defrost time (minutes)	1	1
Target defrost time (minutes)	4	4
Max time override (minutes +)	15	15
Defrost terminate coil temperature (factory setting)	47°F	47°F
Defrost hi terminate coil temperature (cut jumper 2)	70° F	70° F
Sov switch over delay after defrost term. (seconds)	12	12
Defeat switch over delay (seconds) (cut jumper 1)	0	0
Low ambient heat pump lock out	-12°F	-12°F
Low ambient heat pump resume	-3	-3
LPCO input to control	Yes	Yes
LPCO bypass in/ out defrost (minutes)	3	3

[a] Group suffix for drawing number D.
[b] ≤ (Equal or less than).

Table 16. LED fault codes

LED Fault Codes	Fault Description	Defrost Control Behavior
1 Flash	Ambient temp sensor is out of range (open/shorted)	Initiate defrost after every 60 minutes of runtime. Defrost will terminate on coil temp. See Note 1 and 2.
2 Flash	Coil temp sensor is out of range (open/shorted)	Initiate a 15 minute forced defrost after every 60 minutes of runtime. See Note 1 and 2.
3 Flash	Low pressure switch is open	3 flash goes away when/if LPCO closes.
4 Flash	Hard lock out (can only be cleared with a low voltage power cycle)	Occurs after 9th trip of LPCO. See Note 6.
5 Flash	Soft lock out	5 flash goes away after soft lockout period expires. See Note 2.
6 Flash	Defrost cycles too close together	Heating short cycle fault triggers 6 flash. The system will follow 10 adaptive time heating cycles and then return to demand defrost.
7 Flash	Low ambient soft lockout. Outdoor temperature dropped below 3°F. (OFF at -12°F/ON at 3°F)	Outdoor temperature is below 12°F. See Note 5.

1. Initiate adaptive/timed limp mode so long as coil temp sensor is functional. Monitor actual time in defrost and add or reduce run time until next forced defrost based on achieving a 4 minute (+/-1) defrost period.
2. This defrost control utilizes a safety strategy called Adaptive Limp Mode. Adaptive Limp Mode is defined as a timed heating mode following rapid defrosts (accumulated heating times between defrost totaling less than 15 minutes). Once invoked the DFC will limit defrost periods and maximize heating capacity. While in adaptive limp mode the DFC will monitor heating and defrost periods for no longer than 10 cycles. The DFC will then release the board to demand defrost; however, if the LPCO trips while in limp mode the system will initiate a soft lockout and exit limp mode.

   If both coil temp sensor and ambient temp sensor have failed, initiate a 5 minute forced defrost every 60 minutes of run time. This in conjunction with the normal low pressure trip, will initiate a soft lockout.

   a. A short heating cycle that enters defrost in 15 minutes or less and/or enters two more defrosts with less than 15 minutes of accumulative run time each will enter an Adaptive Limp Mode (6 flash).
   b. Coil sensor failure will initiate a timed limp mode. This will be accompanied by a 2 flash. The DFC will initiate defrost after 60 minutes of accumulated heating runtime and terminate after a 5 minute defrost. The limp mode will clear after the sensor fault is cleared.
   c. Ambient sensor failure will initiate an adaptive timed limp mode. This will be accompanied by a 1 flash. The DFC will initiate defrost after 60 minutes of accumulated heating runtime and force a defrost, which will terminate on coil temp. The limp mode will clear after the sensor fault is cleared.
   d. This could be caused by a condenser fan motor failure, low charge or other reasons.
3. The first 15 minute soft lockout the system will return to normal operation. Should this continue to operate in this manner there will be a 30 minute soft lockout and so on. At the end of the lockout process, if a hard lock is necessary, a 4 flash will be announced and system operation is interrupted. If the ambient temperature climbs above 40°F for more than 30 minutes this clears this fault count and resumes normal operation.

   a. If or when normal operation is restored after the ambient temperature climbs above 40°F for more than 30 minutes and another LP trip is monitored on the 9thtrip this will initiate a hard lockout that will not be cleared by temperature or time.
4. Once ambient drops to -12 or lower wait 5 minutes before soft lockout begins. During soft lockout the Y signal passes through to the X2 output. Resume operation when ambient temperature rises to -3°F or higher and after 5 minute soft lockout period expires. LPCO should reset around 5°F.
5. During a hard lockout, the X2 relay opens so that the Y signal does not pass through.

Table 17. LPCO lock-out periods and flash codes

LPCO	Heating Mode	Flash Code
1st Trip	15 minute soft lock-out period	5 and 6 flash
2nd Trip	30 minute soft lock-out period	5 and 6 flash
3 rd Trip	45 minutes soft lock-out period	5 and 6 flash
4th to 8th Trip	18 hour soft lock-out period	5 and 6 flash
9th Trip [(a)]	Hard lock-out	4 flash

[(a)] If LPCO is open, a 3 flash can accommodate any of the faults above and will clear when the LPCO closes.

Table 18. LPCO lock-out periods and flash codes

LPCO	Heating Mode	Flash Code
1st Trip	15 minute soft lock-out period	5 and 6 flash
2nd Trip	30 minute soft lock-out period	5 and 6 flash
3rd Trip	45 minutes soft lock-out period	5 and 6 flash
4th to 8th Trip	18 hour soft lock-out period	5 and 6 flash
9th Trip [(a)]	Hard lock-out	4 flash

[(a)] Once the LPCO closes, the 3 flash fault will not cont- inue showing – only 5 flash if in the softlockout period.

Troubleshooting

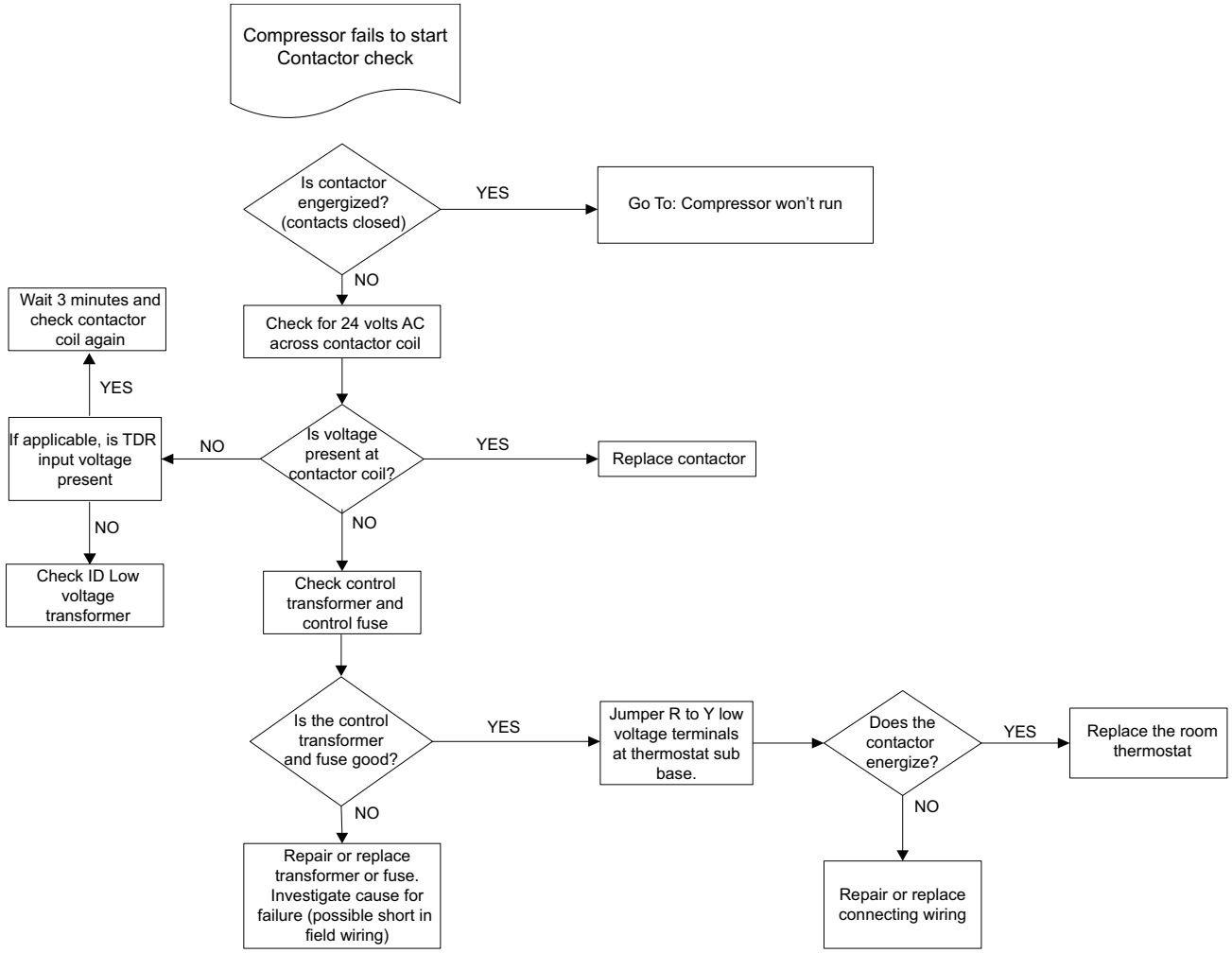

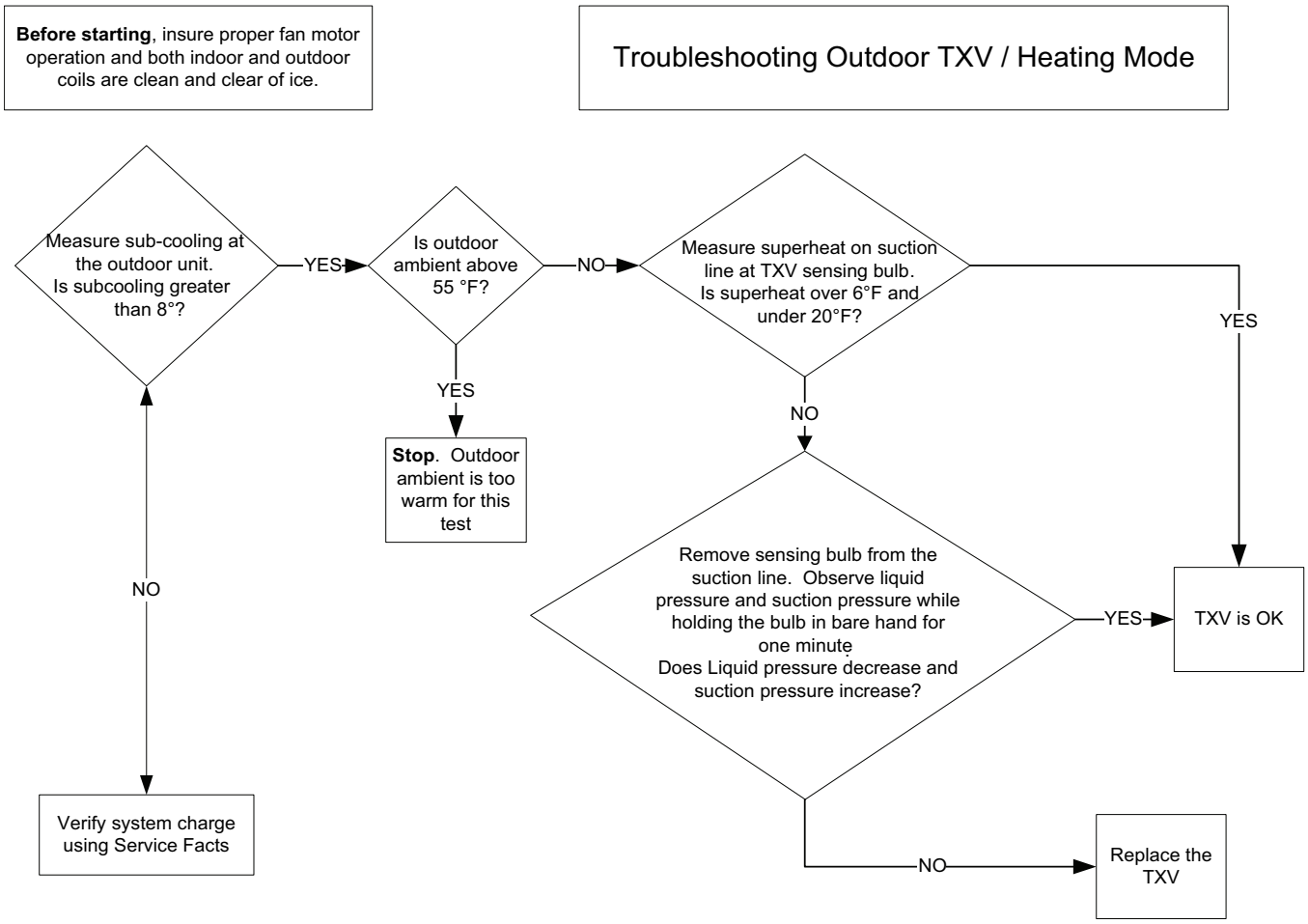
Before starting, insure proper fan motor operation and both indoor and outdoor coils are clean and clear of ice.
Troubleshooting Outdoor TXV / Heating Mode
Measure sub-cooling at the outdoor unit. Is subcooling greater than 8°?
YES
Is outdoor ambient above 55 °F?
NO
Measure superheat on suction line at TXV sensing bulb. Is superheat over 6°F and under 20°F?
YES
YES
Stop. Outdoor ambient is too warm for this test
NO
NO
Remove sensing bulb from the suction line. Observe liquid pressure and suction pressure while holding the bulb in bare hand for one minute Does Liquid pressure decrease and suction pressure increase?
YES
TXV is OK
Verify system charge using Service Facts
NO
Replace the TXV

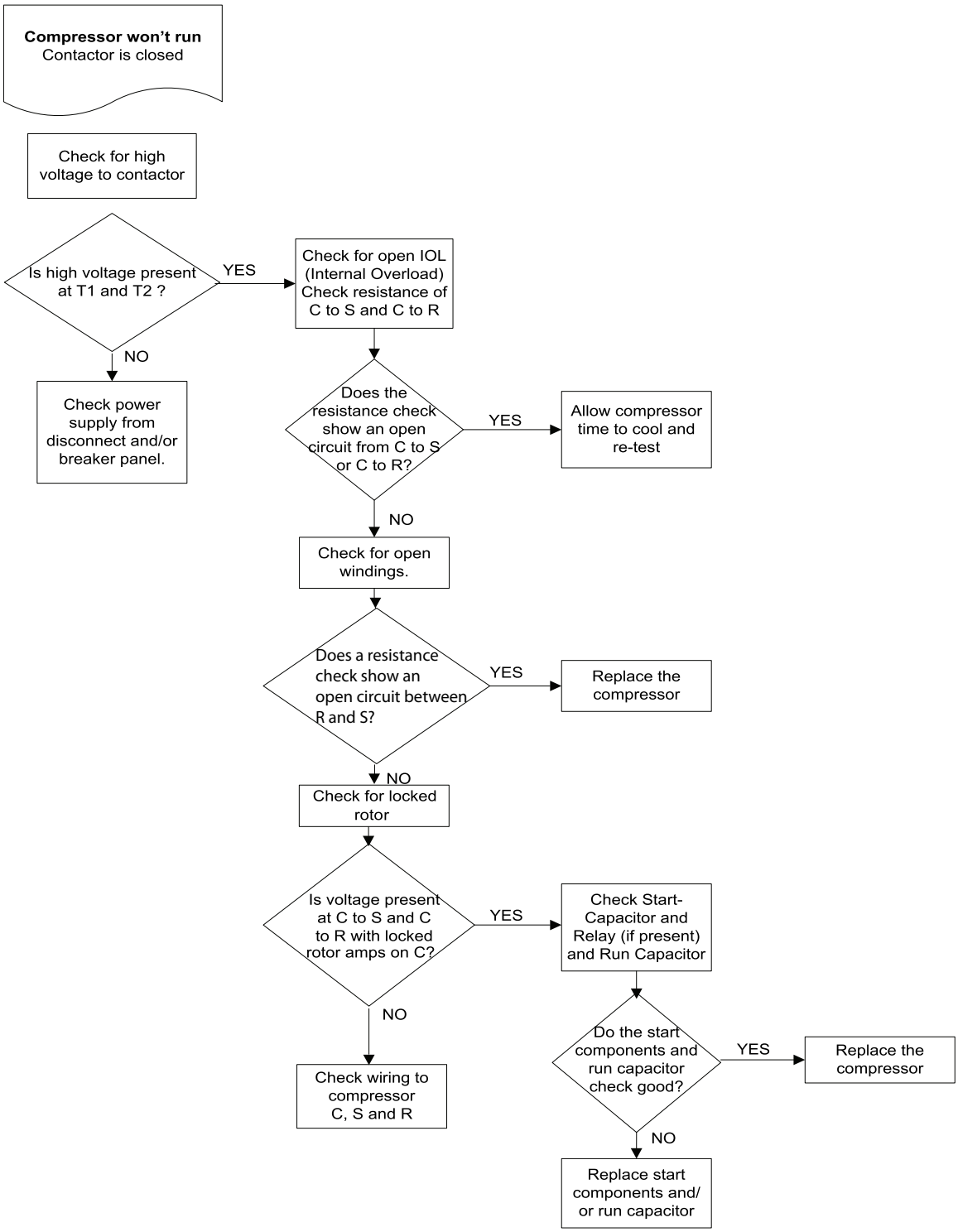
Compressor won't run
Contactor is closed
Check for high voltage to contactor
Is high voltage present at T1 and T2 ?
YES
NO
Check power supply from disconnect and/or breaker panel.
Check for open IOL (Internal Overload) Check resistance of C to S and C to R
Does the resistance check show an open circuit from C to S or C to R?
YES
Allow compressor time to cool and re-test
NO
Check for open windings.
Does a resistance check show an open circuit between R and S?
YES
Replace the compressor
NO
Check for locked rotor
Is voltage present at C to S and C to R with locked rotor amps on C?
YES
Check Start-Capacitor and Relay (if present) and Run Capacitor
NO
Check wiring to compressor C, S and R
Do the start components and run capacitor check good?
YES
Replace the compressor
NO
Replace start components and/ or run capacitor

Wiring Diagrams

Figure 44. Wiring diagram - models 018A, 024A, and 030A

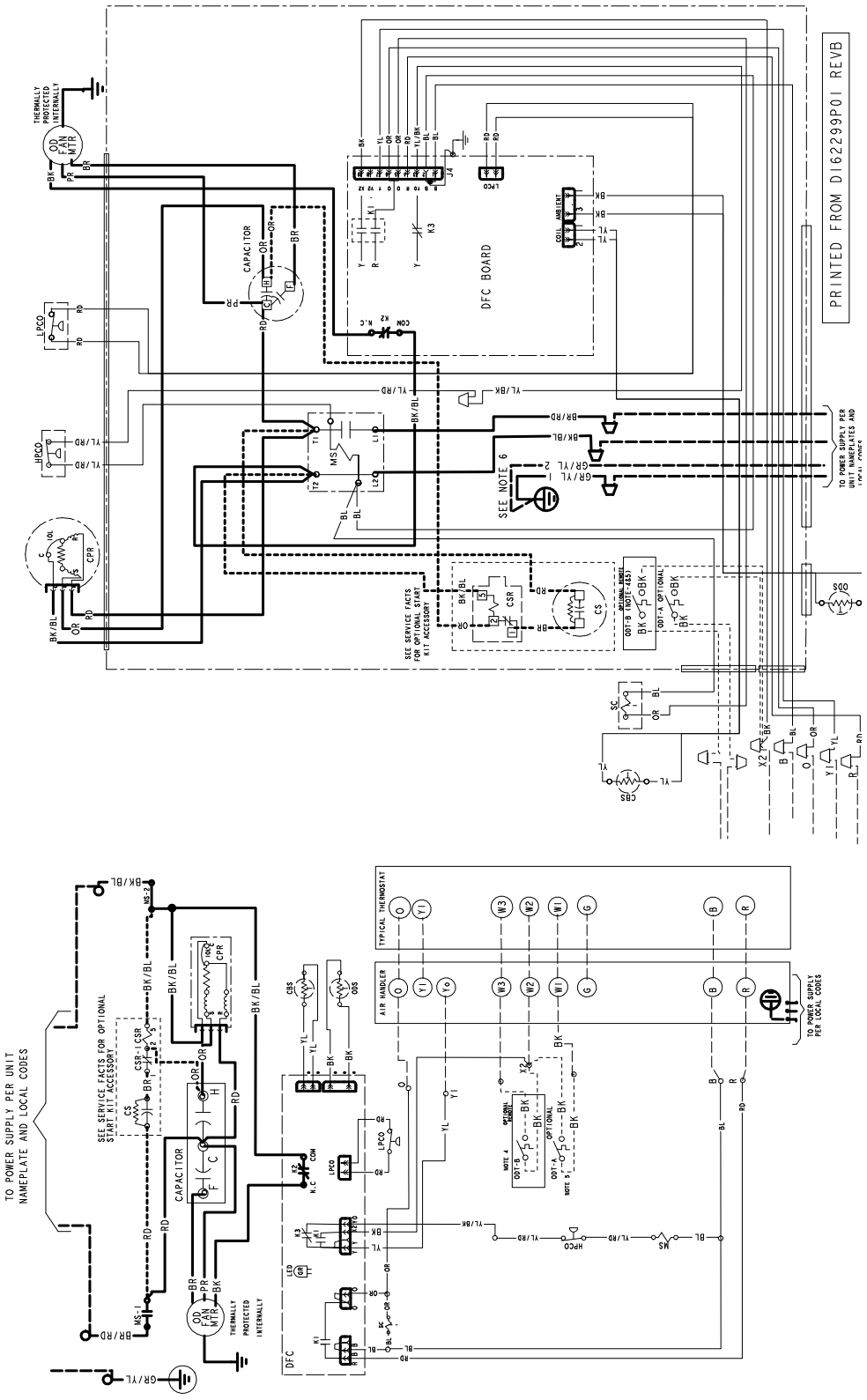

Figure 45. Wiring diagram - models 036A

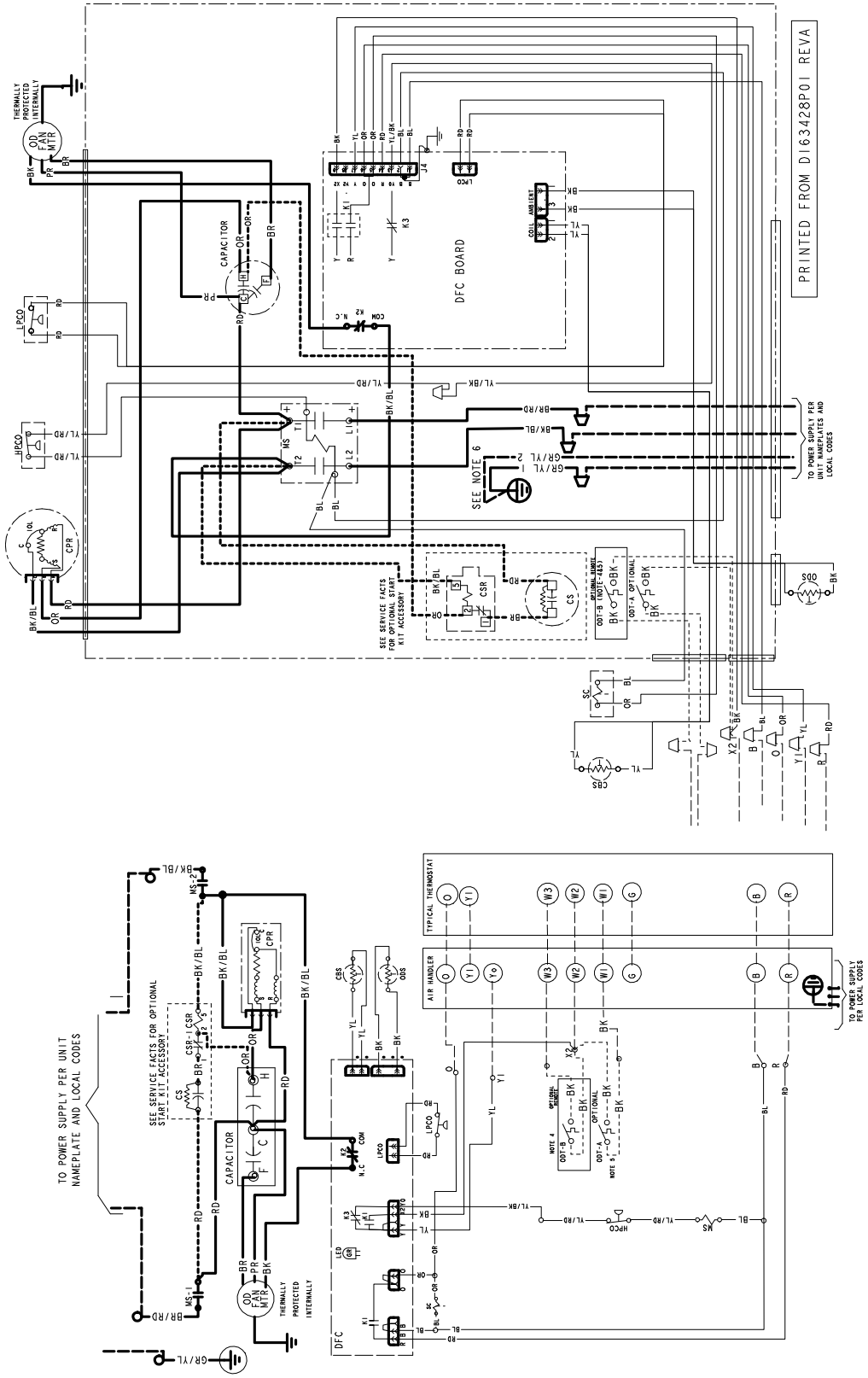

Figure 46. Wiring diagram - models 042A, 048A, and 060A

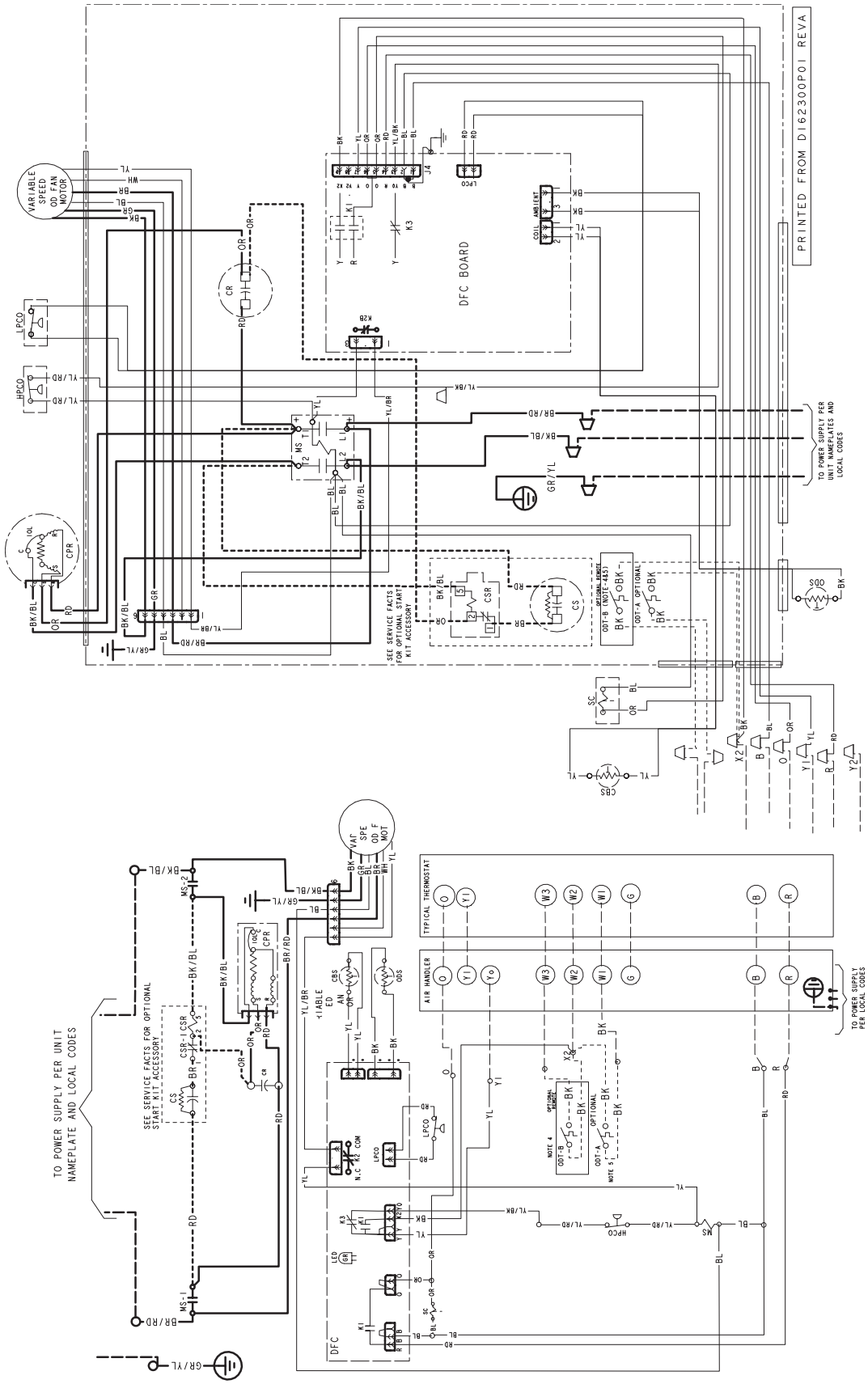

Figure 47. Legends and warnings

NOTES:

1. BE SURE POWER SUPPLY AGREESWITH EQUIPMENT NAMEPLATE.
2. POWER WIRING AND GROUNDING OF EQUIPMENT MUST COMPLY WITH LOCAL CODES
3. LOW VOLTAGE WIRING TO BE NO. 18 AWG MINIMUM CONDUCTOR.
4. ODT-B MUST BE SET LOWER THAN ODT-A
5. IF ODT-A IS NOT USED, ADD JUMPER BETWEEN W1 AND W2 AT AIR HANDLER
6. THE GROUND CONNECTIONS SHOWN HERE ARE 2 SEPARATE WIRES, DO NOT CRIMP TOGETHER
   "GR/YL 1" WIRE IS FOR GROUND LUG AND " GR/YL 2" IS FOR GROUND WIRE/WIRE NUT OPTION.

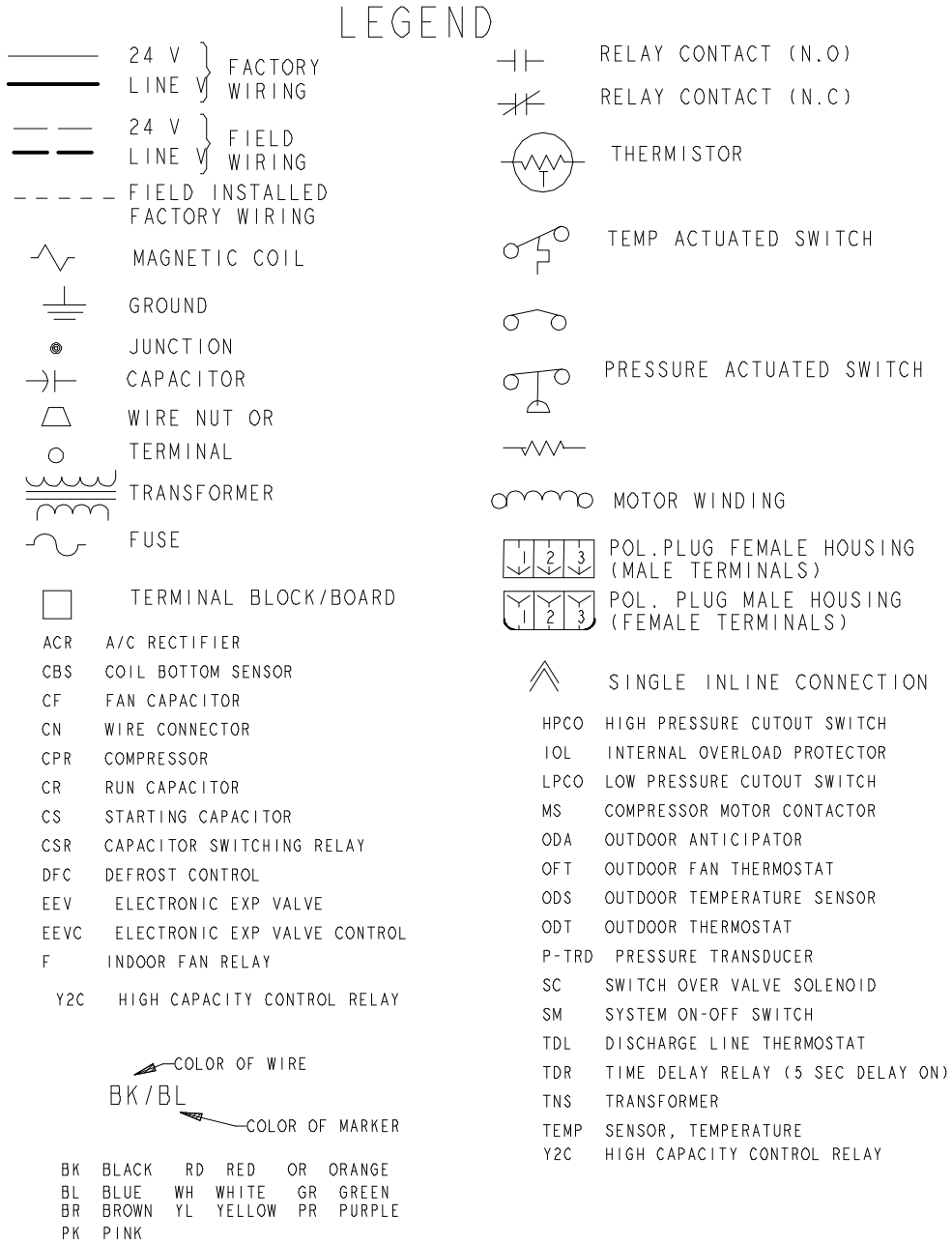

Pressure Curves

Cooling performance can be checked when the outdoor temperature is above 65° F.

To check cooling performance, select the proper indoor cfm, all pressures to stabilize. Measure indoor wet bulb temperature, outdoor temperature, discharge and suction pressures.

1. On the plots locate outdoor temperature
2. Locate indoor wet bulb
3. Find intersection of OD temperature and ID W.B.
4. Read discharge or suction pressure in left column

Example:

1. Outdoor temperature 82° F
2. In door wet bulb 67° F
3. At intersection
4. Discharge pressure @ 740 cfm is 291 psig
5. Suction pressure @ 740 cfm is 154 psig

Actual:

Liquid pressure should be +/- 10 psi of chart.

Suction pressure should be +/- 3 psi of chart.

Figure 48. Model N5HP5018A1

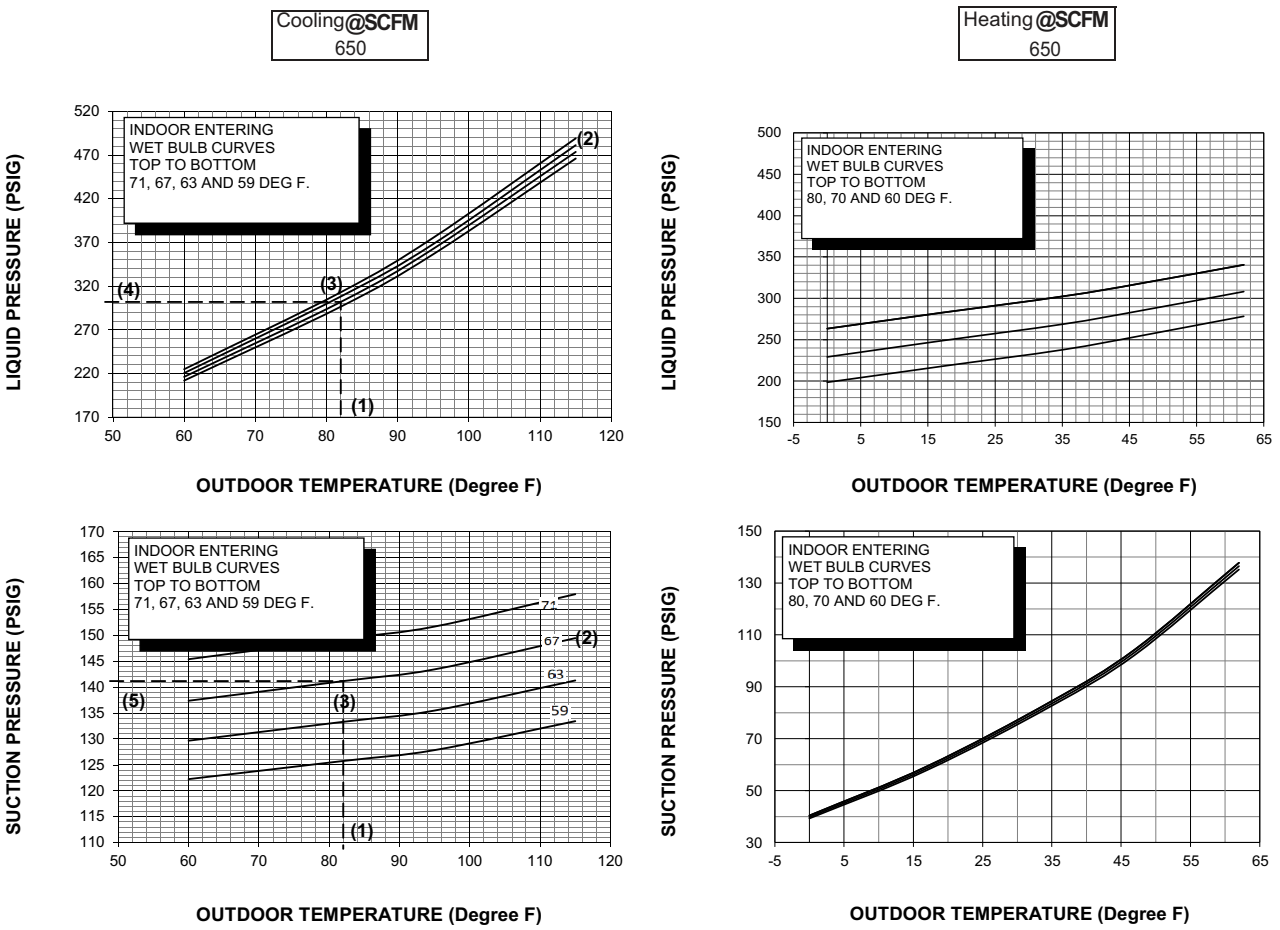

Figure 49. Model N5HP5024A1

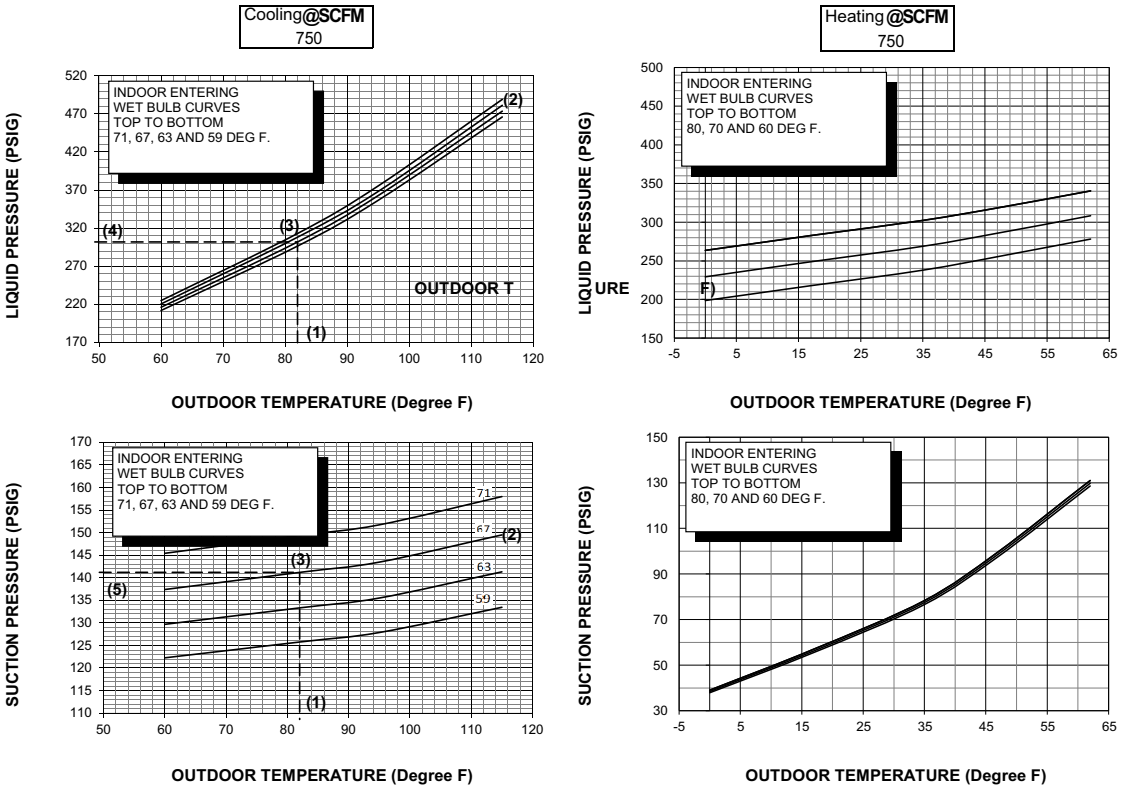

Figure 50. Model N5HP5030A1

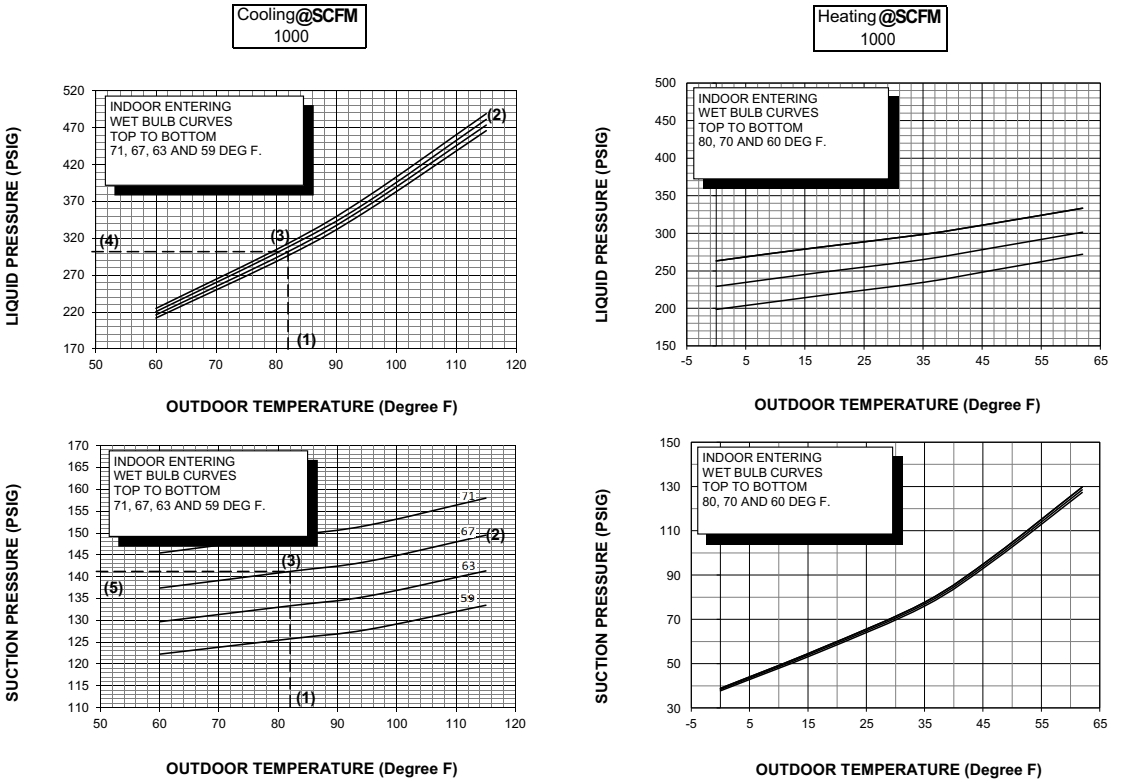

Figure 51. Model A5HP5036A1

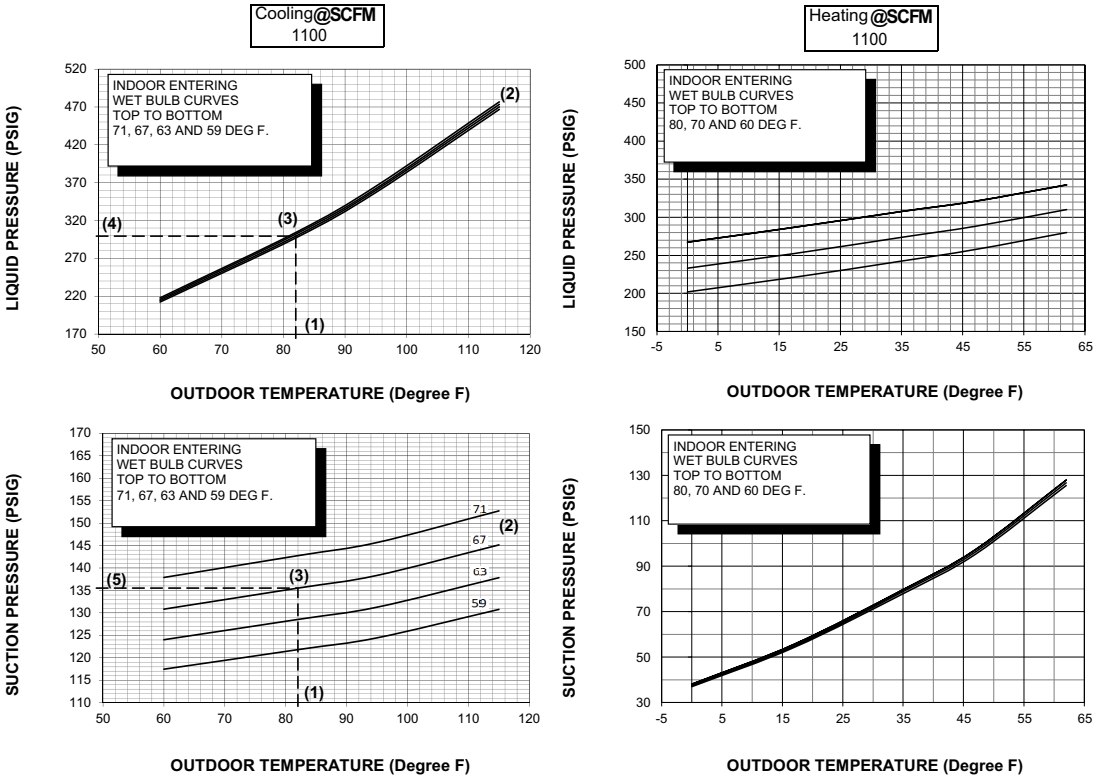

Figure 52. Model N5HP5042A1

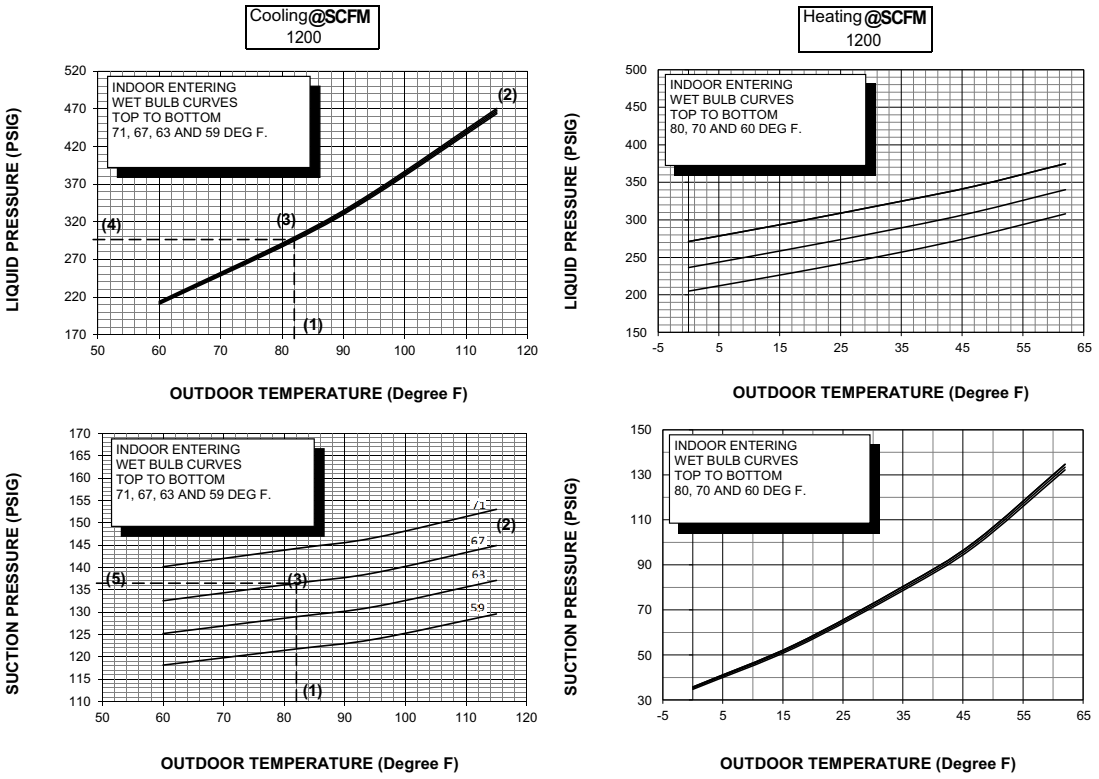

Figure 53. Model N5HP5048A1

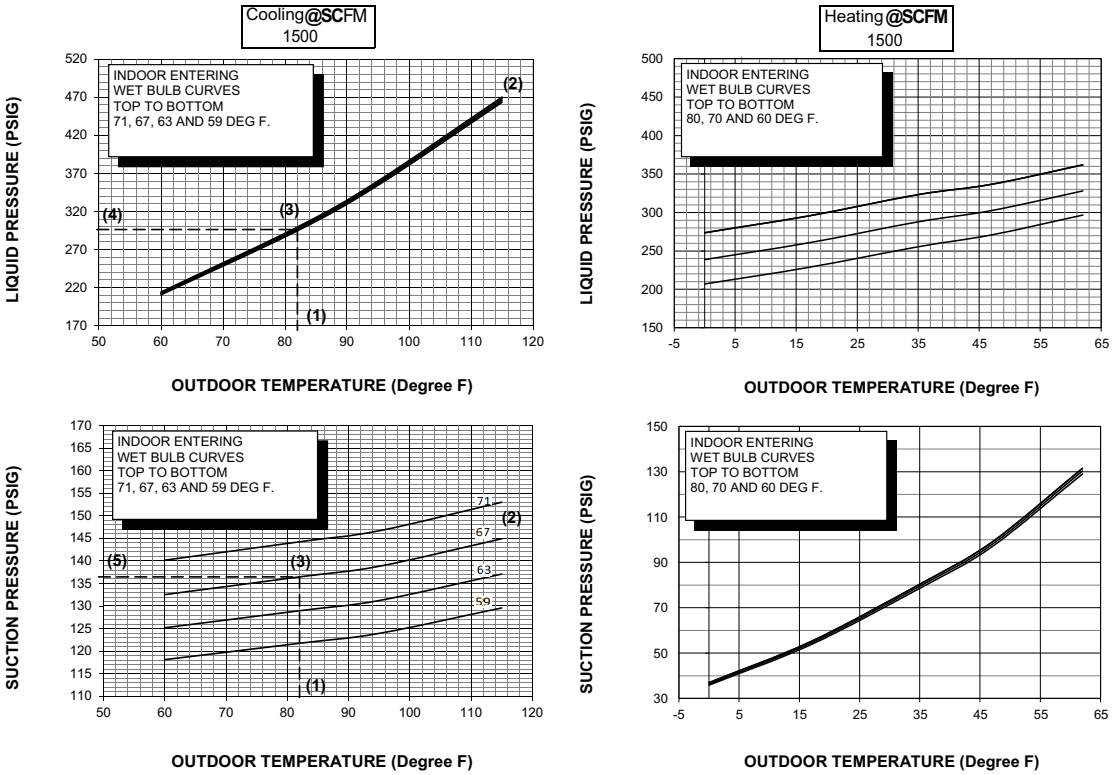

Figure 54. Model N5HP5060A1

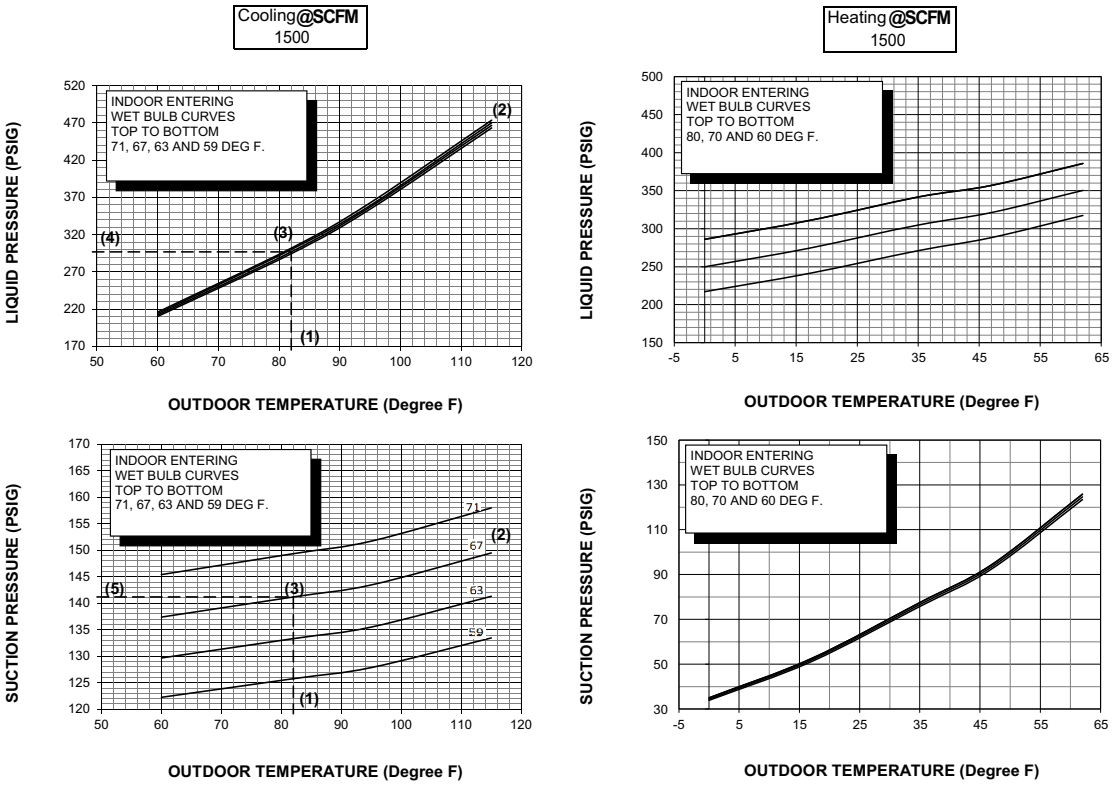

Refrigerant Circuit

Note: *The refrigerant circuit illustrations below are for reference only.*

Figure 55. Heating refrigeration cycle

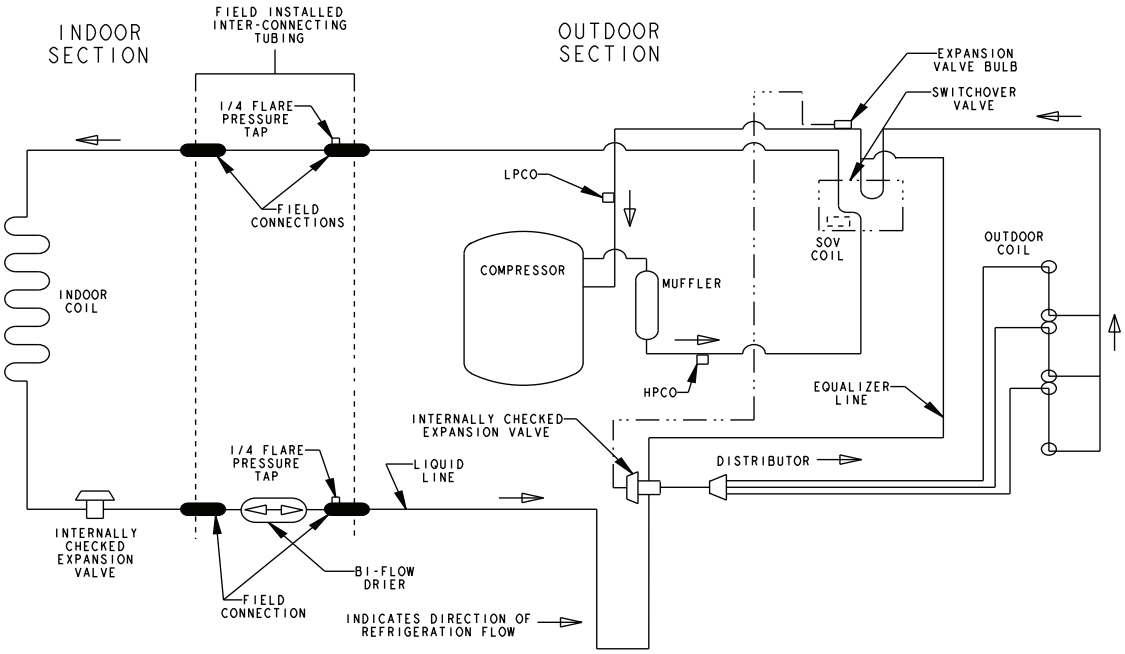

Figure 56. Cooling refrigeration cycle

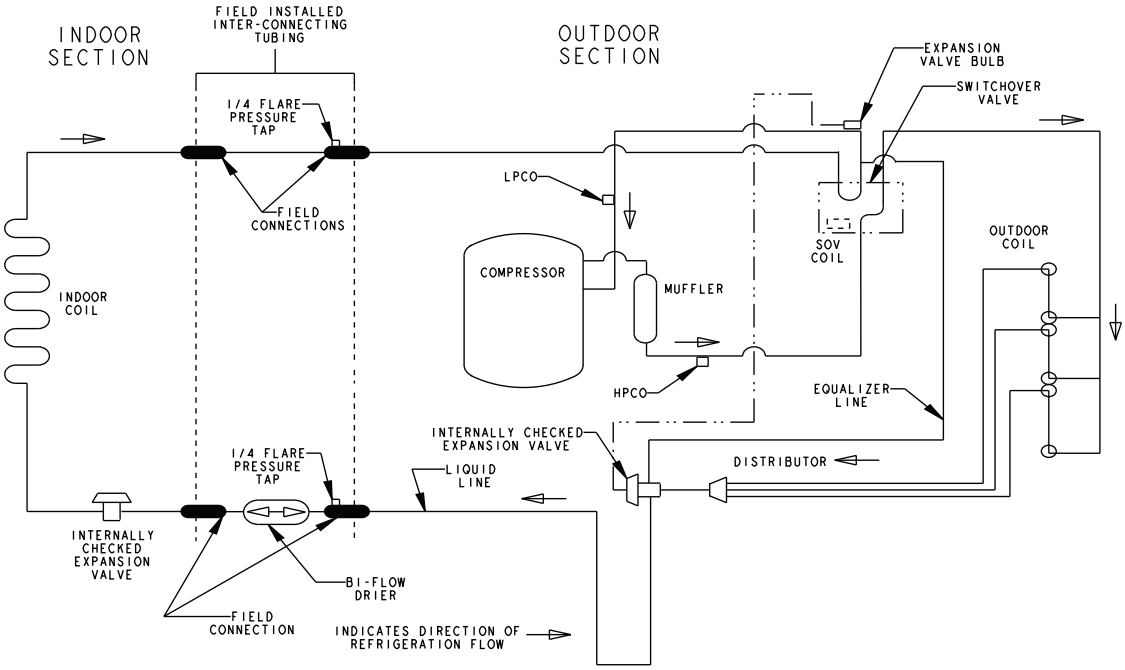

Notes

About Trane and American Standard Heating and Air Conditioning

Trane and American Standard create comfortable, energy efficient indoor environments for residential applications. For more information, please visit www.trane.com or www.americanstandardair.com.

The AHRI Certified mark indicates company participation in the AHRI Certification program. For verification of individual certified products, go to ahridirectory.org.

The manufacturer has a policy of continuous data improvement and it reserves the right to change design and specifications without notice. We are committed to using environmentally conscious print practices.

ODR-SVX031B-EN 25 Sep 2026
Supersedes ODR-SVX031A-EN (March 2026)

©2026