RELEASED 07/Oct/2016 20:56:30 GMT

UNLESS OTHERWISE SPECIFIED ALL DIMENSIONS ARE IN MILLIMETERS.
TOLERANCE:
X, = ±
X,X = ±
X,XX = ±
FINISH
ANGLES = ± °
HOLE DIA = +/-
CONFORMS TO ASME Y14.5M-1994.

TRANE

THIS DRAWING IS PROPRIETARY AND SHALL NOT BE COPIED OR ITS CONTENTS DISCLOSED TO OUTSIDE PARTIES WITHOUT THE WRITTEN CONSENT OF TRANE

DRAWN BY: A. THIENES
© TRANE DATE: 11-NOV-2015

DO NOT SCALE PRINT
THIRD ANGLE PROJECTION

57228185
SHEET 1 OF 3
REV D

DIAGRAM
UNIT COMPONENT LOCATION
FIXED SPEED

NOTE:

1. FOR USE ON 500T UNITS WITH ECONOMIZER OPTION INSTALLED.
2. COMPONENT LOCATION WITH ECONOMIZER OPTION SHOWN.

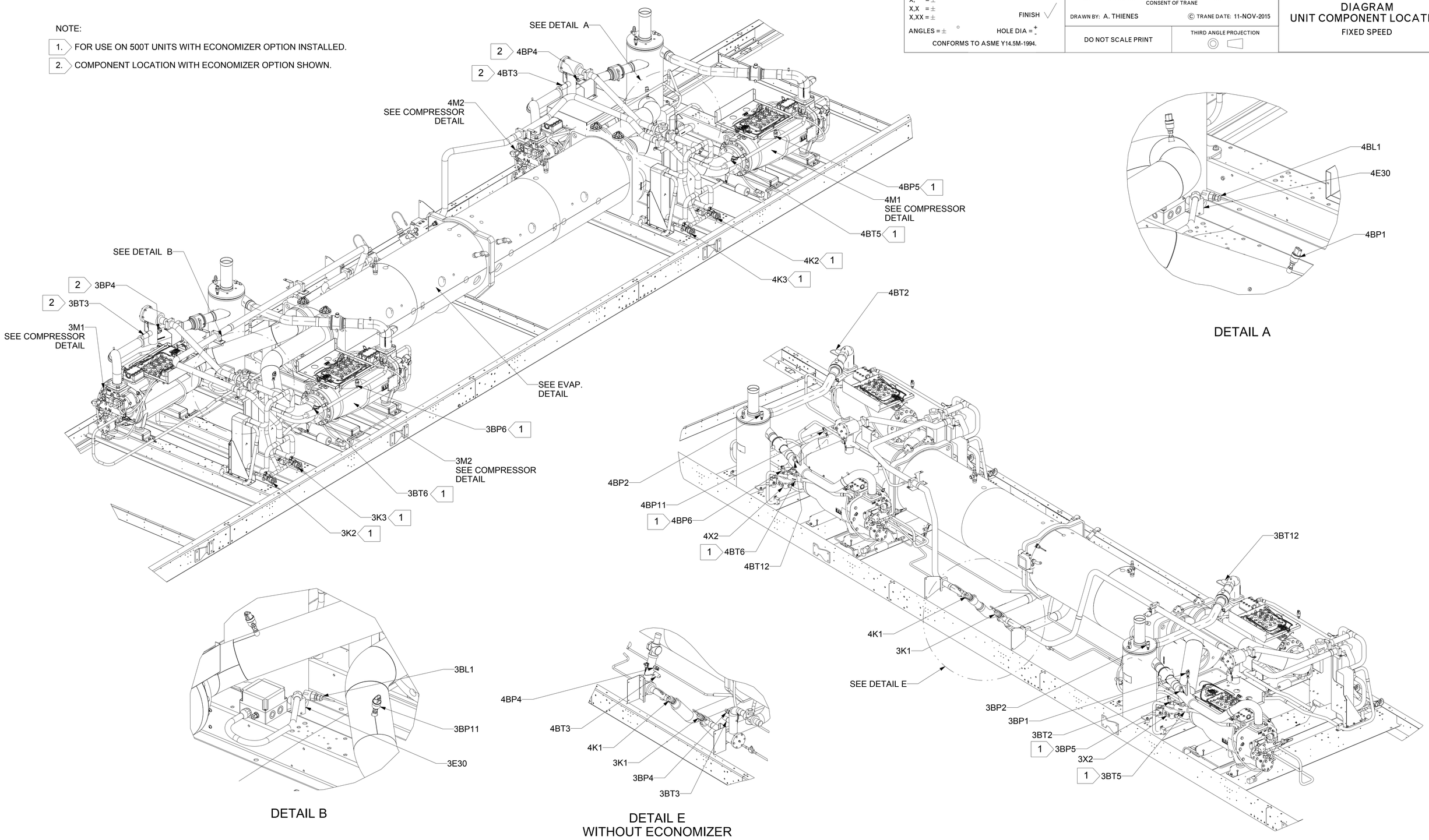

RELEASED 07/Oct/2016 20:56:30 GMT

UNLESS OTHERWISE SPECIFIED ALL DIMENSIONS ARE IN MILLIMETERS.
TOLERANCE:
X, = ±
X,X = ±
X,XX = ±
FINISH
ANGLES = ± °
HOLE DIA = +/-
CONFORMS TO ASME Y14.5M-1994.

TRANE
THIS DRAWING IS PROPRIETARY AND SHALL NOT BE COPIED OR ITS CONTENTS DISCLOSED TO OUTSIDE PARTIES WITHOUT THE WRITTEN CONSENT OF TRANE
DRAWN BY: A. THIENES
© TRANE DATE: 11-NOV-2015
DO NOT SCALE PRINT
THIRD ANGLE PROJECTION

57228185
SHEET 2 OF 3
REV D

DIAGRAM
UNIT COMPONENT LOCATION
FIXED SPEED

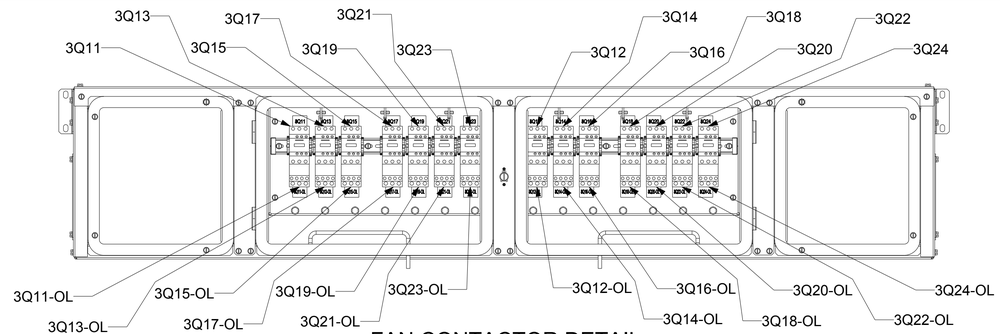

FAN CONTACTOR DETAIL
CKT 1

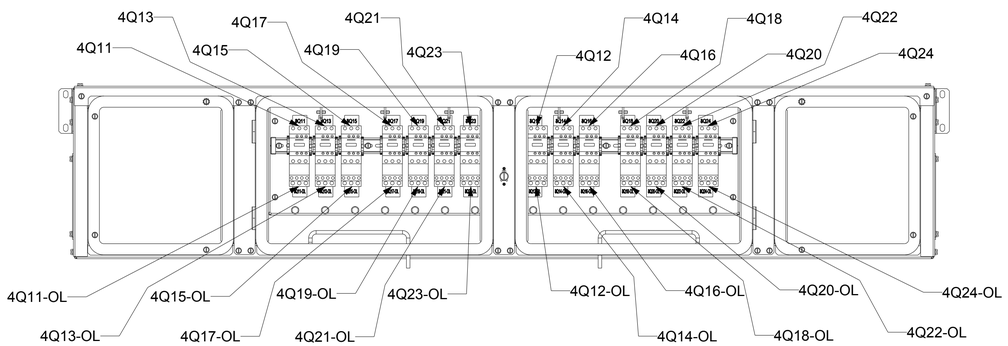

FAN CONTACTOR DETAIL
CKT 2

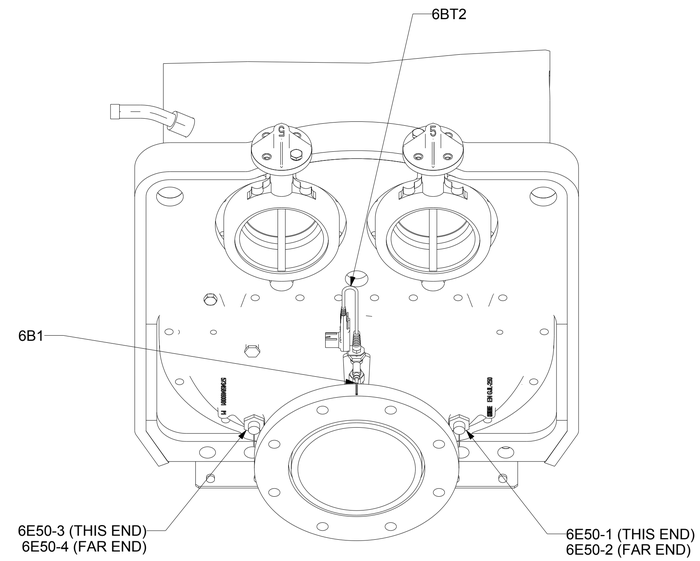

DETAIL C

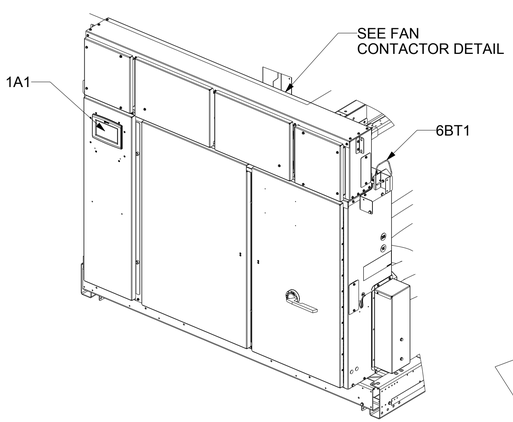

PANEL DETAIL

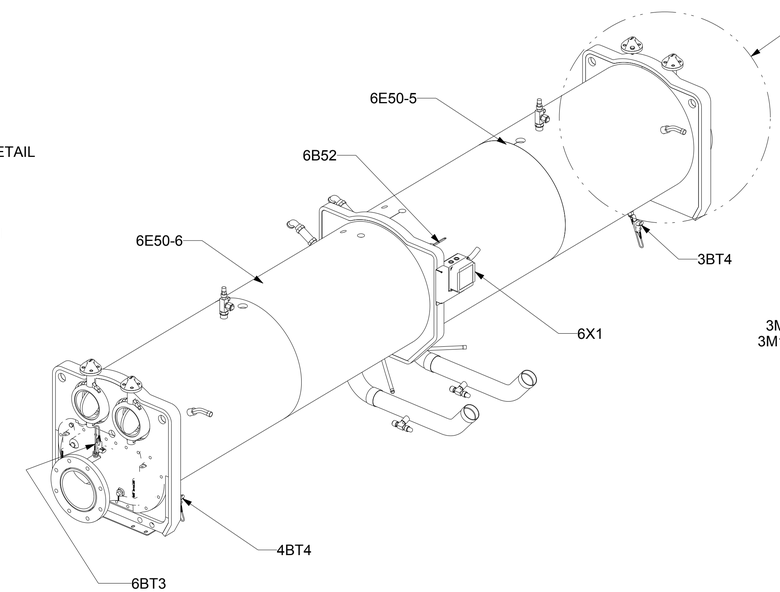

EVAP DETAIL
(REAR ISO VIEW)

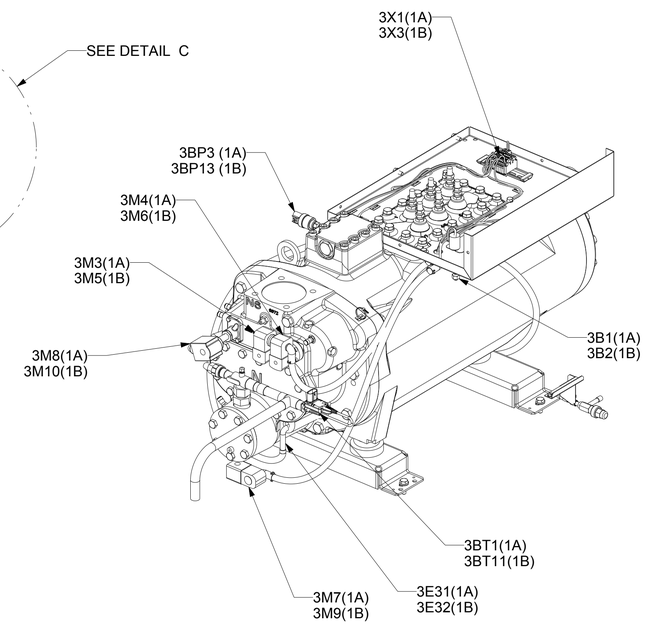

COMPRESSOR DETAIL
CKT 1A & CKT 1B

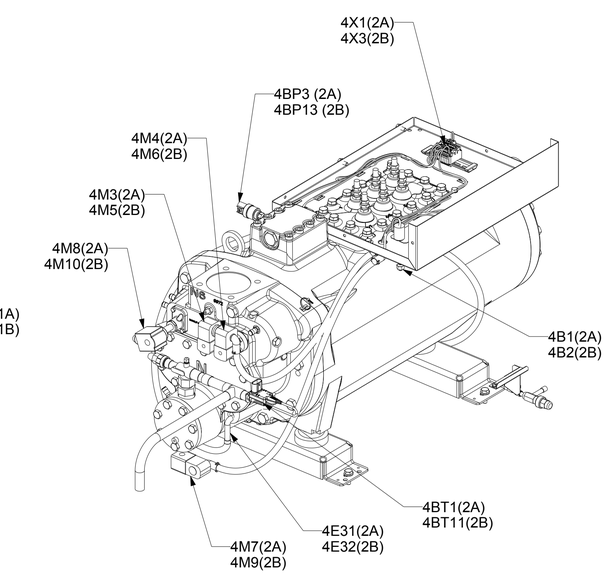

COMPRESSOR DETAIL
CKT 2A & CKT 2B

DEVICE	DESCRIPTION
1A1	ADAPTIVIEW TOUCHSCREEN DISPLAY
3B1	SWITCH; HIGH PRESSURE CUTOUT - COMPRESSOR 1A
3B2	SWITCH; HIGH PRESSURE CUTOUT - COMPRESSOR 1B
3BL1	LEVEL SENSOR; OIL LOSS - COMPRESSOR 1A
3BP1	PRESSURE TRANSDUCER; SUCTION PRESSURE - CIRCUIT 1A
3BP2	PRESSURE TRANSDUCER; DISCHARGE PRESSURE - CIRCUIT 1
3BP3	PRESSURE TRANSDUCER; OIL PRESSURE - CIRCUIT 1A
3BP4	PRESSURE TRANSDUCER; LIQUID PRESSURE MICROCHANNEL EVAP - CIRCUIT 1
3BP5	ECONOMIZER PRESSURE SENSOR CIRCUIT 1A
3BP6	ECONOMIZER PRESSURE SENSOR CIRCUIT 1B
3BP11	PRESSURE TRANSDUCER; SUCTION PRESSURE - CIRCUIT 1B
3BP13	PRESSURE TRANSDUCER; OIL PRESSURE - CIRCUIT 1B
3BT1	TEMPERATURE SENSOR; OIL TEMPERATURE - CIRCUIT 1A
3BT2	TEMPERATURE SENSOR; DISCHARGE TEMPERATURE - CIRCUIT 1A
3BT3	TEMPERATURE SENSOR; LIQUID LINE TEMPERATURE MICROCHANNEL EVAP - CIRCUIT 1A
3BT4	TEMPERATURE SENSOR; EVAPORATOR POOL TEMPERATURE - CIRCUIT 1A
3BT5	ECONOMIZER FAST-ACTING TEMPERATURE SENSOR CIRCUIT 1A
3BT6	ECONOMIZER FAST-ACTING TEMPERATURE SENSOR CIRCUIT 1B
3BT11	TEMPERATURE SENSOR; OIL TEMPERATURE - CIRCUIT 1B
3BT12	TEMPERATURE SENSOR; DISCHARGE TEMPERATURE - CIRCUIT 1B
3E30	HEATER; OIL SEPARATOR - CIRCUIT 1
3E31	HEATER; CRANKCASE - COMPRESSOR 1A
3E32	HEATER; CRANKCASE - COMPRESSOR 1B
3K1	ELECTRONIC EXPANSION VALVE; CIRCUIT 1A
3K2	ECONOMIZER EXPANSION VALVE CIRCUIT 1A
3K3	ECONOMIZER EXPANSION VALVE CIRCUIT 1B
3M1	MOTOR; COMPRESSOR 1A
3M2	MOTOR; COMPRESSOR 1B
3M3	SOLENOID; PROPORTIONAL UNLOAD CONTROL - COMPRESSOR 1A
3M4	SOLENOID; PROPORTIONAL LOAD CONTROL - COMPRESSOR 1A
3M5	SOLENOID; PROPORTIONAL UNLOAD CONTROL - COMPRESSOR 1B
3M6	SOLENOID; PROPORTIONAL LOAD CONTROL - COMPRESSOR 1B
3M7	SOLENOID; OIL - COMPRESSOR 1A
3M8	SOLENOID; STEP LOAD CONTROL - COMPRESSOR 1A
3M9	SOLENOID; OIL - COMPRESSOR 1B
3M10	SOLENOID; STEP LOAD CONTROL - COMPRESSOR 1B
3M11 THRU 24	MOTOR; CONDENSER FAN - CIRCUIT 1
3M25	SOLENOID; CONDENSER LIQUID RECEIVER, CKT 1
3Q11	CONTACTOR; CONDENSER FAN; CIRCUIT 1
3Q11-OL	OVERLOAD; CONDENSER FAN; CIRCUIT 1
3Q12	CONTACTOR; CONDENSER FAN; CIRCUIT 1
3Q12-OL	OVERLOAD; CONDENSER FAN; CIRCUIT 1
3Q13	CONTACTOR; CONDENSER FAN; CIRCUIT 1
3Q13-OL	OVERLOAD; CONDENSER FAN; CIRCUIT 1
3Q14	CONTACTOR; CONDENSER FAN; CIRCUIT 1
3Q14-OL	OVERLOAD; CONDENSER FAN; CIRCUIT 1
3Q15	CONTACTOR; CONDENSER FAN; CIRCUIT 1
3Q15-OL	OVERLOAD; CONDENSER FAN; CIRCUIT 1
3Q16	CONTACTOR; CONDENSER FAN; CIRCUIT 1
3Q16-OL	OVERLOAD; CONDENSER FAN; CIRCUIT 1
3Q17	CONTACTOR; CONDENSER FAN; CIRCUIT 1
3Q17-OL	OVERLOAD; CONDENSER FAN; CIRCUIT 1
3Q18	CONTACTOR; CONDENSER FAN; CIRCUIT 1
3Q18-OL	OVERLOAD; CONDENSER FAN; CIRCUIT 1
3Q19	CONTACTOR; CONDENSER FAN; CIRCUIT 1
3Q19-OL	OVERLOAD; CONDENSER FAN; CIRCUIT 1
3Q20	CONTACTOR; CONDENSER FAN; CIRCUIT 1
3Q20-OL	OVERLOAD; CONDENSER FAN; CIRCUIT 1
3Q21	CONTACTOR; CONDENSER FAN; CIRCUIT 1
3Q21-OL	OVERLOAD; CONDENSER FAN; CIRCUIT 1
3Q22	CONTACTOR; CONDENSER FAN; CIRCUIT 1
3Q22-OL	OVERLOAD; CONDENSER FAN; CIRCUIT 1
3Q23	CONTACTOR; CONDENSER FAN; CIRCUIT 1
3Q23-OL	OVERLOAD; CONDENSER FAN; CIRCUIT 1
3Q24	CONTACTOR; CONDENSER FAN; CIRCUIT 1
3Q24-OL	OVERLOAD; CONDENSER FAN; CIRCUIT 1
3X1	TERMINAL BLOCK; JUNCTION BOX - COMPRESSOR 1A
3X2	TERMINAL BLOCK; JUNCTION BOX - OIL SEPERATOR CIRCUIT 1
3X3	TERMINAL BLOCK; JUNCTION BOX - COMPRESSOR 1B
4B1	SWITCH; HIGH PRESSURE CUTOUT - COMPRESSOR 2A - CIRCUIT 2A
4B2	SWITCH; HIGH PRESSURE CUTOUT - COMPRESSOR 2B - CIRCUIT 2B
4BL1	LEVEL SENSOR; OIL LOSS - COMPRESSOR 2A
4BP1	PRESSURE TRANSDUCER; SUCTION PRESSURE - CIRCUIT 2A
4BP2	PRESSURE TRANSDUCER; DISCHARGE PRESSURE - CIRCUIT 2
4BP3	PRESSURE TRANSDUCER; OIL PRESSURE - CIRCUIT 2A
4BP4	PRESSURE TRANSDUCER; LIQUID PRESSURE MICROCHANNEL EVAP - CIRCUIT 2
4BP5	ECONOMIZER PRESSURE SENSOR CIRCUIT 2A
4BP6	ECONOMIZER PRESSURE SENSOR CIRCUIT 2B
4BP11	PRESSURE TRANSDUCER; SUCTION PRESSURE - CIRCUIT 2B
4BP13	PRESSURE TRANSDUCER; OIL PRESSURE - CIRCUIT 2B
4BT1	TEMPERATURE SENSOR; OIL TEMPERATURE - CIRCUIT 2A
4BT2	TEMPERATURE SENSOR; DISCHARGE TEMPERATURE - CIRCUIT 2A
4BT3	TEMPERATURE SENSOR; LIQUID LINE TEMPERATURE MICROCHANNEL EVAP - CIRCUIT 2A
4BT4	TEMPERATURE SENSOR; EVAPORATOR POOL TEMPERATURE - CIRCUIT 2A
4BT5	ECONOMIZER FAST ACTING TEMPERATURE SENSOR CIRCUIT 2A
4BT6	ECONOMIZER FAST-ACTING TEMPERATURE SENSOR CIRCUIT 2B
4BT11	TEMPERATURE SENSOR; OIL TEMPERATURE - CIRCUIT 2B
4BT12	TEMPERATURE SENSOR; DISCHARGE TEMPERATURE - CIRCUIT 2B
4E30	HEATER; OIL SEPARATOR - CIRCUIT 2
4E31	HEATER; CRANKCASE - COMPRESSOR 2A
4E32	HEATER; CRANKCASE - COMPRESSOR 2B

DEVICE	DESCRIPTION
4K1	ELECTRONIC EXPANSION VALVE; CIRCUIT 2A
4K2	ECONOMIZER EXPANSION VALVE CIRCUIT 2A
4K3	ECONOMIZER EXPANSION VALVE CIRCUIT 2B
4M1	MOTOR; COMPRESSOR 2A
4M2	MOTOR; COMPRESSOR 2B
4M3	SOLENOID; PROPORTIONAL UNLOAD CONTROL - COMPRESSOR 2A
4M4	SOLENOID; PROPORTIONAL LOAD CONTROL - COMPRESSOR 2A
4M5	SOLENOID; PROPORTIONAL UNLOAD CONTROL - COMPRESSOR 2B
4M6	SOLENOID; PROPORTIONAL LOAD CONTROL - COMPRESSOR 2B
4M7	SOLENOID; OIL - COMPRESSOR 2A
4M8	SOLENOID; STEP LOAD CONTROL - COMPRESSOR 2A
4M9	SOLENOID; OIL - COMPRESSOR 2B
4M10	SOLENOID; STEP LOAD CONTROL - COMPRESSOR 2B
4M11 THRU 24	MOTOR; CONDENSER FAN - CIRCUIT 2
4M25	SOLENOID; CONDENSER LIQUID RECEIVER, CKT 2
4Q11	CONTACTOR; CONDENSER FAN; CIRCUIT 2
4Q11-OL	OVERLOAD; CONDENSER FAN; CIRCUIT 2
4Q12	CONTACTOR; CONDENSER FAN; CIRCUIT 2
4Q12-OL	OVERLOAD; CONDENSER FAN; CIRCUIT 2
4Q13	CONTACTOR; CONDENSER FAN; CIRCUIT 2
4Q13-OL	OVERLOAD; CONDENSER FAN; CIRCUIT 2
4Q14	CONTACTOR; CONDENSER FAN; CIRCUIT 2
4Q14-OL	OVERLOAD; CONDENSER FAN; CIRCUIT 2
4Q15	CONTACTOR; CONDENSER FAN; CIRCUIT 2
4Q15-OL	OVERLOAD; CONDENSER FAN; CIRCUIT 2
4Q16	CONTACTOR; CONDENSER FAN; CIRCUIT 2
4Q16-OL	OVERLOAD; CONDENSER FAN; CIRCUIT 2
4Q17	CONTACTOR; CONDENSER FAN; CIRCUIT 2
4Q17-OL	OVERLOAD; CONDENSER FAN; CIRCUIT 2
4Q18	CONTACTOR; CONDENSER FAN; CIRCUIT 2
4Q18-OL	OVERLOAD; CONDENSER FAN; CIRCUIT 2
4Q19	CONTACTOR; CONDENSER FAN; CIRCUIT 2
4Q19-OL	OVERLOAD; CONDENSER FAN; CIRCUIT 2
4Q20	CONTACTOR; CONDENSER FAN; CIRCUIT 2
4Q20-OL	OVERLOAD; CONDENSER FAN; CIRCUIT 2
4Q21	CONTACTOR; CONDENSER FAN; CIRCUIT 2
4Q21-OL	OVERLOAD; CONDENSER FAN; CIRCUIT 2
4Q22	CONTACTOR; CONDENSER FAN; CIRCUIT 2
4Q22-OL	OVERLOAD; CONDENSER FAN; CIRCUIT 2
4Q23	CONTACTOR; CONDENSER FAN; CIRCUIT 2
4Q23-OL	OVERLOAD; CONDENSER FAN; CIRCUIT 2
4Q24	CONTACTOR; CONDENSER FAN; CIRCUIT 2
4Q24-OL	OVERLOAD; CONDENSER FAN; CIRCUIT 2
4X1	TERMINAL BLOCK; JUNCTION BOX - COMPRESSOR 2A
4X2	TERMINAL BLOCK; JUNCTION BOX - OIL SEPERATOR CIRCUIT 2
4X3	TERMINAL BLOCK; JUNCTION BOX - COMPRESSOR 2B
6B1	SWITCH; EVAPORATOR WATER FLOW
6B52	THERMOSTAT; ANTIFREEZE HEATER
6BT1	TEMPERATURE SENSOR; OUTDOOR AIR SENSOR
6BT2	TEMPERATURE SENSOR; EVAPORATOR LEAVING WATER TEMPERATURE
6BT3	TEMPERATURE SENSOR; EVAPORATOR ENTERING WATER TEMPERATURE
6E50-1	SUBMERSION HEATER; EVAPORATOR SHELL ANTIFREEZE HEATER
6E50-2	SUBMERSION HEATER; EVAPORATOR SHELL ANTIFREEZE HEATER
6E50-3	SUBMERSION HEATER; EVAPORATOR SHELL ANTIFREEZE HEATER
6E50-4	SUBMERSION HEATER; EVAPORATOR SHELL ANTIFREEZE HEATER
6E50-5	HEAT TAPE; EVAPORATOR SHELL ANTIFREEZE HEATER
6E50-6	HEAT TAPE; EVAPORATOR SHELL ANTIFREEZE HEATER
6X1	TERMINAL BLOCK; EVAPORATOR HEATER JUNCTION BOX

UNLESS OTHERWISE SPECIFIED ALL DIMENSIONS ARE IN MILLIMETERS.
TOLERANCE:
X, = ±
X,X = ±
X,XX = ±
FINISH √
ANGLES = ± °
HOLE DIA = +/-
CONFORMS TO ASME Y14.5M-1994.

TRANE

THIS DRAWING IS PROPRIETARY AND SHALL NOT BE COPIED OR ITS CONTENTS DISCLOSED TO OUTSIDE PARTIES WITHOUT THE WRITTEN CONSENT OF TRANE

DRAWN BY: A. THIENES
© TRANE DATE: 11-NOV-2015
DO NOT SCALE PRINT
THIRD ANGLE PROJECTION

57228185
SHEET 3 OF 3
REV D

DIAGRAM
UNIT COMPONENT LOCATION
FIXED SPEED

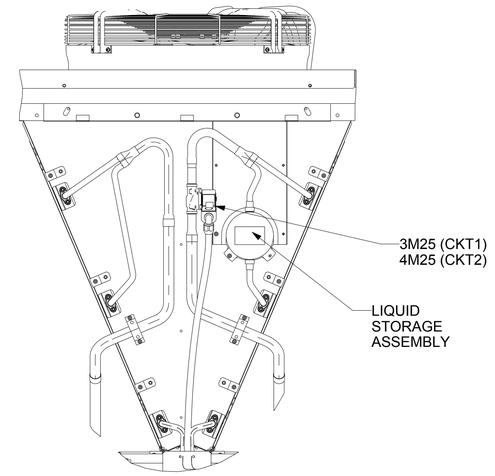

DETAIL D
(PIE PANEL REMOVED)

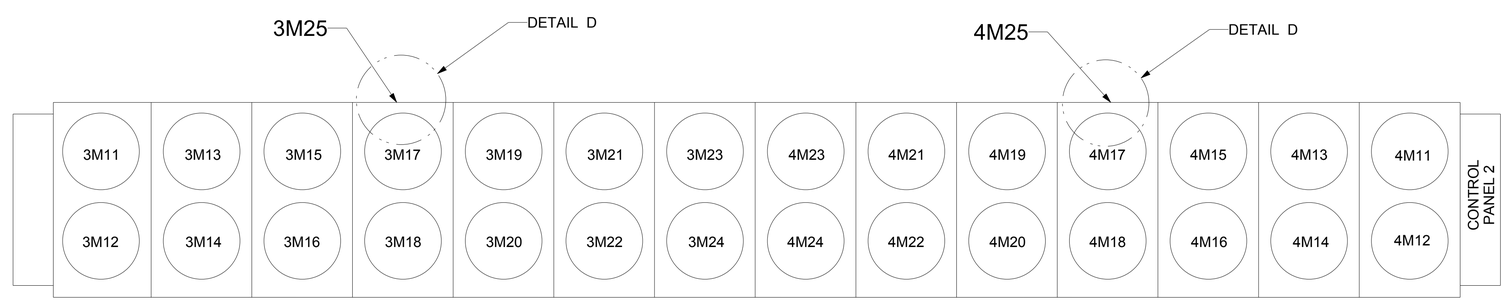

FAN LAYOUT
450T/500T