NOTICE
USE COPPER CONDUCTORS ONLY!
UNIT TERMINALS ARE NOT DESIGNED TO ACCEPT OTHER TYPES OF CONDUCTORS.
FAILURE TO DO THE ABOVE COULD RESULT IN EQUIPMENT DAMAGE.

AVIS
N'UTILISER QUE DES CONDUCTEURS EN CUIVRE!
LES BORNES DE L'UNITÉ NE SONT PAS CONÇUES POUR RECEVOIR D'AUTRES TYPES DE CONDUCTEURS.
UN MANQUEMENT À LA PROCÉDURE CI-DESSUS PEUT ENTRAÎNER DES DOMMAGES À L'ÉQUIPEMENT.

AVISO
¡UTILICE ÚNICAMENTE CONDUCTORES DE COBRE!
LAS TERMINALES DE LA UNIDAD NO ESTÁN DISEÑADAS PARA ACEPTAR OTROS TIPOS DE CONDUCTORES.
NO REALIZAR LO ANTEDICHO PUEDE PROVOCAR DAÑOS EN EL EQUIPO.

WARNING
HAZARDOUS VOLTAGE!
DISCONNECT ALL ELECTRIC POWER INCLUDING REMOTE DISCONNECTS AND FOLLOW LOCK OUT AND TAG PROCEDURES BEFORE SERVICING. INSURE THAT ALL MOTOR CAPACITORS HAVE DISCHARGED STORED VOLTAGE. UNITS WITH VARIABLE SPEED DRIVE, REFER TO DRIVE INSTRUCTIONS FOR CAPACITOR DISCHARGE. FAILURE TO DO THE ABOVE COULD RESULT IN DEATH OR SERIOUS INJURY.

AVERTISSEMENT
TENSION DANGEREUSE!
COUPER TOUTES LES TENSIONS ET OUVRIR LES SECTIONNEURS À DISTANCE, PUIS SUIVRE LES PROCÉDURES DE VERROUILLAGE ET DES ÉTIQUETTES AVANT TOUTE INTERVENTION. VÉRIFIER QUE TOUS LES CONDENSATEURS DES MOTEURS SONT DÉCHARGÉS. DANS LE CAS D'UNITÉS COMPORTANT DES ENTRAÎNEMENTS À VITESSE VARIABLE, SE REPORTER AUX INSTRUCTIONS DE L'ENTRAÎNEMENT POUR DÉCHARGER LES CONDENSATEURS.
UN MANQUEMENT À LA PROCÉDURE CI-DESSUS PEUT ENTRAÎNER DES BLESSURES GRAVES, VOIRE LA MORT.

ADVERTENCIA
¡VOLTAJE PELIGROSO!
DESCONECTE TODA LA ENERGÍA ELÉCTRICA, INCLUSO LAS DESCONEXIONES REMOTAS Y SIGA LOS PROCEDIMIENTOS DE CIERRE Y ETIQUETADO ANTES DE PROCEDER AL SERVICIO. ASEGÚRESE DE QUE TODOS LOS CAPACITORES DEL MOTOR HAYAN DESCARGADO EL VOLTAJE ALMACENADO. PARA LAS UNIDADES CON TRANSMISIÓN DE VELOCIDAD VARIABLE, CONSULTE LAS INSTRUCCIONES PARA LA DESCARGA DEL CONDENSADOR.
NO REALIZAR LO ANTEDICHO PUEDE PROVOCAR LA MUERTE O LESIONES GRAVES.

DRAWN BY:	N. SCHAMS
© TRANE DATE:	14-JULY-2015
MASTER FILE:	
REVISION DATE:	22-MAY-2019
REPLACES:	
SIMILAR TO:	
USED BY:	

TRANE®

CAD: CREO SCHEMATICS

57227906 SHEET 1 REV H

FIELD WIRING DIAGRAM
RTAF

DEVICE PREFIX LOCATION CODE	
AREA	LOCATION
1	CONTROL PANEL #1
2	CONTROL PANEL #2
3	CIRCUIT 1
4	CIRCUIT 2
5	CUSTOMER INSTALLED
6	UNIT WIRING

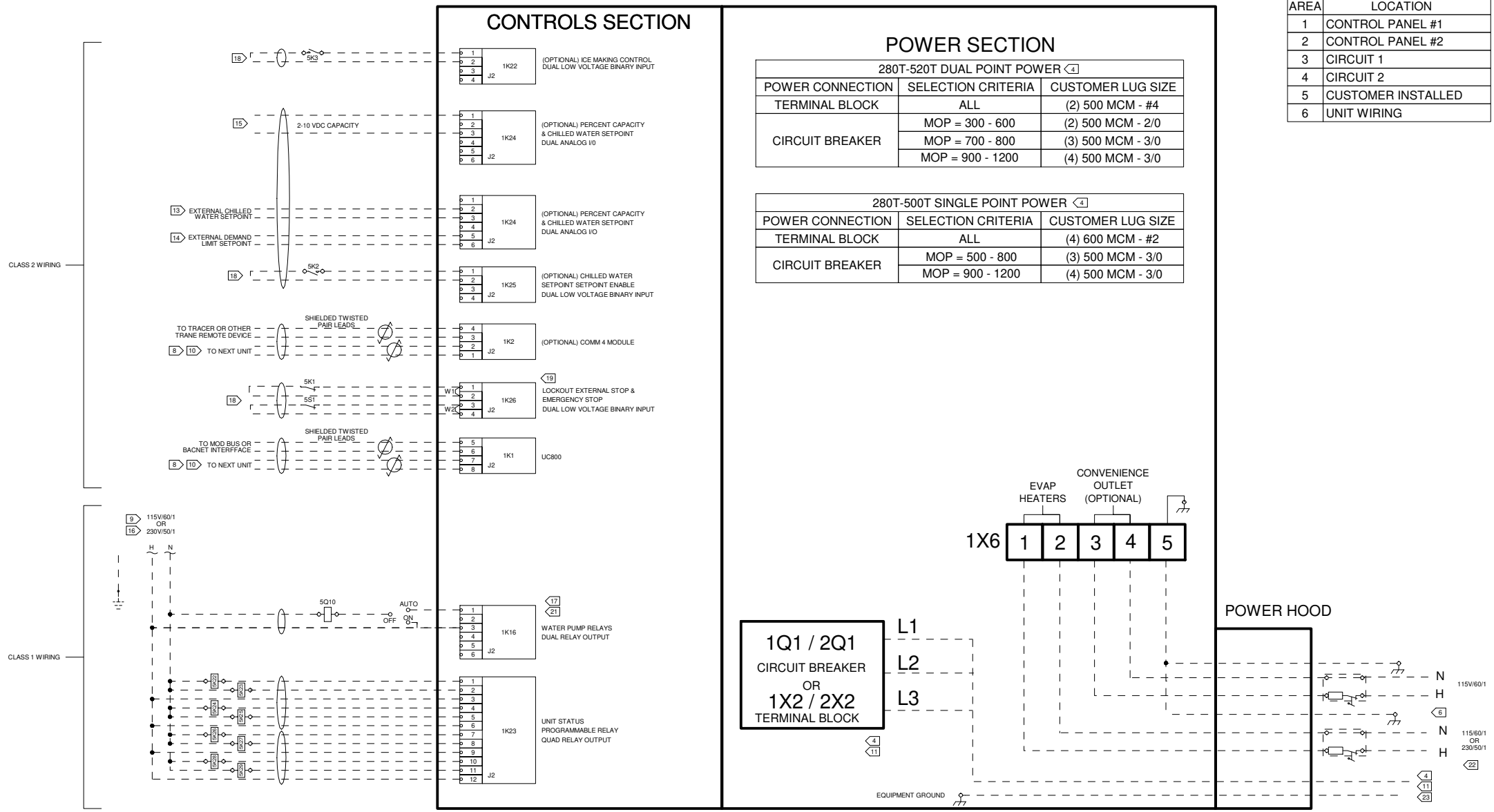

280T-520T DUAL POINT POWER 4		
POWER CONNECTION	SELECTION CRITERIA	CUSTOMER LUG SIZE
TERMINAL BLOCK	ALL	(2) 500 MCM - #4
CIRCUIT BREAKER	MOP = 300 - 600	(2) 500 MCM - 2/0
	MOP = 700 - 800	(3) 500 MCM - 3/0
	MOP = 900 - 1200	(4) 500 MCM - 3/0

280T-500T SINGLE POINT POWER 4		
POWER CONNECTION	SELECTION CRITERIA	CUSTOMER LUG SIZE
TERMINAL BLOCK	ALL	(4) 600 MCM - #2
CIRCUIT BREAKER	MOP = 500 - 800	(3) 500 MCM - 3/0
	MOP = 900 - 1200	(4) 500 MCM - 3/0

DRAWN BY: N. SCHAMS	TRANE®	57227906	SHEET 2 / REV H
© TRANE DATE: 14-JULY-2015		FIELD WIRING DIAGRAM RTAF	
MASTER FILE:			
REVISION DATE: 22-MAY-2019			
REPLACES:			
SIMILAR TO:	THIS DRAWING IS PROPRIETARY AND SHALL NOT BE COPIED OR ITS CONTENTS DISCLOSED TO OUTSIDE PARTIES WITHOUT THE WRITTEN CONSENT OF TRANE		
USED BY:	CAD: CREO SCHEMATICS		

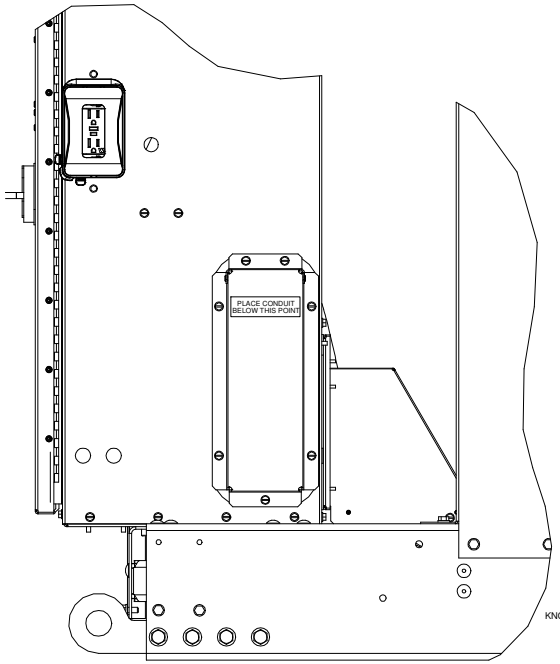

PANEL SIDE VIEW

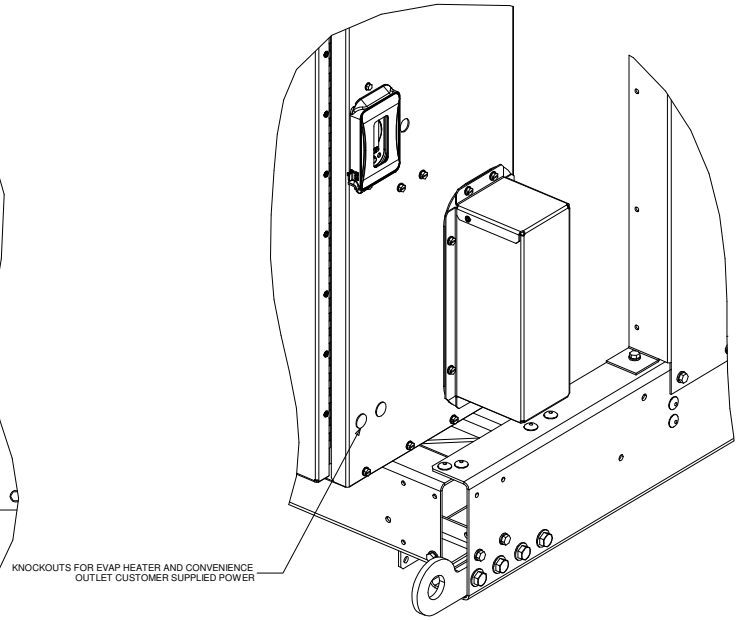

PANEL ISO VIEW

GENERAL NOTES

1. CAUTION-DO NOT ENERGIZE THE UNIT UNTIL CHECK OUT AND STARTUP PROCEDURES HAVE BEEN COMPLETED.
2. ALL MOTORS ARE PROTECTED FROM PRIMARY SINGLE PHASE FAILURES.
3. CAUTION-TRANE PUMP CONTROL MUST BE USED TO PROVIDE PUMP CONTROL. EVAPORATOR CHILLED WATER PUMP MUST BE CONTROLLED BY THE CHILLER OUTPUT. FAILURE TO COMPLY WITH THIS REQUIREMENT MAY RESULT IN DAMAGE OT THE UNIT.

4. FOR DUAL POINT POWER OPTION ON 280T-520T UNITS FIELD CONNECTIONS ARE MADE TO 1Q1/1X2 ON PANEL 1 AND 2Q1/2X2 IN PANEL 2. FOR SINGLE POINT POWER OPTION ON 280T-500T UNITS FIELD CONNECTIONS ARE MADE TO 6X11 OR 6Q12 IN SINGLE POINT POWER BOX.

WIRING REQUIREMENTS

5. RECOMMENDED FIELD WIRING CONNECTIONS ARE SHOWN BY DASHED LINES

6. POWER FOR THE EVAPORATOR HEATER AND/OR OPTIONAL CONVENIENCE OUTLET IS SUPPLIED BY A CUSTOMER SUPPLIED POWER SUPPLY. MAX FUSE SIZE IS 30A WHEN HEATER POWER DRAW IS 2440VA. MAX FUSE SIZE FOR THE OPTIONAL CONVENIENCE OUTLET IS 15 AMPS.

7. DO NOT RUN LOW VOLTAGE CONTROL WIRING (30 VOLTS OR LESS) IN CONDUIT WITH 110 VOLT OR HIGHER WIRING. DO NOT EXCEED THE FOLLOWING MAXIMUN RUN LENGTHS FOR A GIVEN SIZE: 14 AWG, 5000 FT; 16 AWG, 2000 FT; 18 AWG, 1000FT.

8. SHIELDED TWISTED PAIR LEADS ARE REQUIRED FOR CONNECTIONS TO THE COMMUNICATIONS INTERFACE MODULE (1K1 AND 1K2). THE SHIELD SHOULD BE GROUNDED AT THE RTAF CONTROL PANEL END.

9. CUSTOMER SUPPLIED POWER 115/60/1PH OR 230/50/1PH TO POWER RELAYS. MAX. FUSE SIZE IS 20 AMPS. GROUND ALL CUSTOMER SUPPLIED POWER SUPPLIES AS REQUIRED BY APPLICABLE CODES. GREEN GROUND SCREWS ARE PROVIDED IN UNIT CONTROL PANEL.

10. WIRED TO NEXT UNIT. 22 AWG SHIELDED COMMUNICATION WIRE EQUIVALENT TO HELIX LF22P0014216 RECOMMENDED. THE SUM TOTAL OF ALL INTERCONNECTED CABLE SEGMENTS NOT TO EXCEED 4500 FEET. CONNECTION TOPOLOGY SHOULD BE DAISY CHAIN. REFER TO BUILDING AUTOMATION SYSTEM (BAS) COMMUNICATION INSTALLATION LITERATURE FOR END OF LINE TERMINATION RESISTOR REQUIREMENTS.

11. ALL UNIT POWER WIRING MUST BE 600 VOLT COPPER CONDUCTORS ONLY AND HAVE A MINIMUM TEMPERATURE INSULATION RATING OF 90 DEGREE C. REFER TO UNIT NAMEPLATE FOR MINIMUM CIRCUIT AMPACITY AND MAXIMUM OVERCURRENT PROTECTION DEVICE. PROVIDE AN EQUIPMENT GROUND IN ACCORDANCE WITH APPLICABLE ELECTRIC CODES. REFER TO WIRERANGE TABLE FOR LUG SIZES.

12. ALL FIELD WIRING MUST BE IN ACCORDANCE WITH NATIONAL ELECTRIC CODE AND LOCAL REQUIREMENTS.

CONTACT RATINGS AND REQUIREMENTS

13. WIRED TO CUSTOMER CHILLED WATER SET POINT 2-10 VDC FROM FACTORY. SEE OPERATING INSTRUCTIONS TO CONFIGURE FOR 4-20mA.

14. WIRED TO CUSTOMER CURRENT LIMIT SET POINT 2-10 VDC FROM FACTORY. SEE OPERATING INSTRUCTIONS TO CONFIGURE FOR 4-20mA.

15. WIRED TO CUSTOMER COMPRESSOR % RLA OUTPUT 2-10 VDC.

16. ALL CUSTOMER CONTROL CIRCUIT WIRING MUST BE COPPER CONDUCTORS ONLY AND HAVE A MINIMUM INSULATION RATING OF 300 VOLTS. EXCEPT AS NOTED, ALL CUSTOMER WIRING CONNECTIONS ARE MADE TO CIRCUIT BOARD MOUNTED BOX LUGS WITH A WIRE RANGE OF 14 TO 18 AWG OR DIN RAIL MOUNTED SPRING FORCE TERMINALS.

17. UNIT PROVIDED DRY CONTACTS FOR THE CONDENSER/CHILLED WATER PUMP CONTROL. RELAY CONTACT RATINGS FOR 120 VAC 7.2 AMPS RESISTIVE, 2.88 AMPS PILOT DUTY, OR 1/3 HP, 7.2 FLA, CONTACTS ARE RATED FOR 5 AMPS GENERAL PURPOSE DUTY 240 VOLTS.

18. CUSTOMER SUPPLIED CONTACTS FOR ALL LOW VOLTAGE CONNECTIONS MUST BE COMPATABLE WITH DRY CIRCUIT 24 VOLTS DC FOR A 12 mA RESISTIVE LOAD. SILVER OR GOLD PLATED CONTACTS RECOMMENDED.

19. THE CONTACTS FOR AUTO STOP AND EMERGENCY STOP SWITCHES ARE JUMPERED AT THE FACTORY BY JUMPERS 1W1 & 1W2 TO ENABLE UNIT OPERATION. IF REMOTE CONTROL IS DESIRED, REMOVED THE JUMPERS AND CONNECT TO THE DESIRED CONTROL CIRCUIT.

20. SOLID OVALS REPRESENT MAX NUMBER OF CONDUITS AND/OR CABLE GLANDS USED.

21. FIELD WIRING REQUIRED ONLY WITH FIELD INSTALLED PUMP OPTION.

22. 400V, 50Hz UNITS WILL BE FACTORY WIRED TO UTILIZE 230V ACROSS THE EVAP HEATERS.

23. FIELD WIRING TO 1Q1/2Q1/1X1/2X1 ONLY NEEDED ON DUAL POWER POINT UNITS.

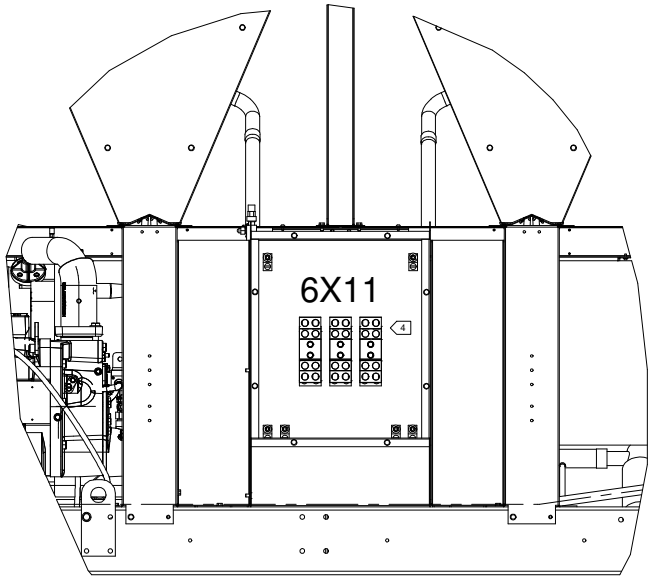

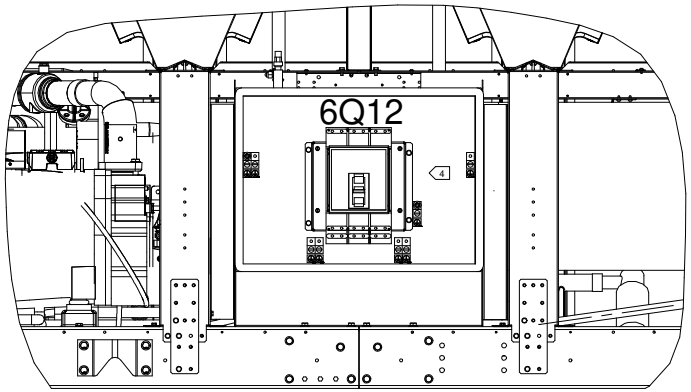

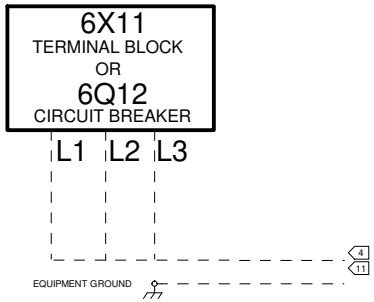

SINGLE POINT POWER OPTION