RELEASED 05/Mar/2018 18:54:02 GMT

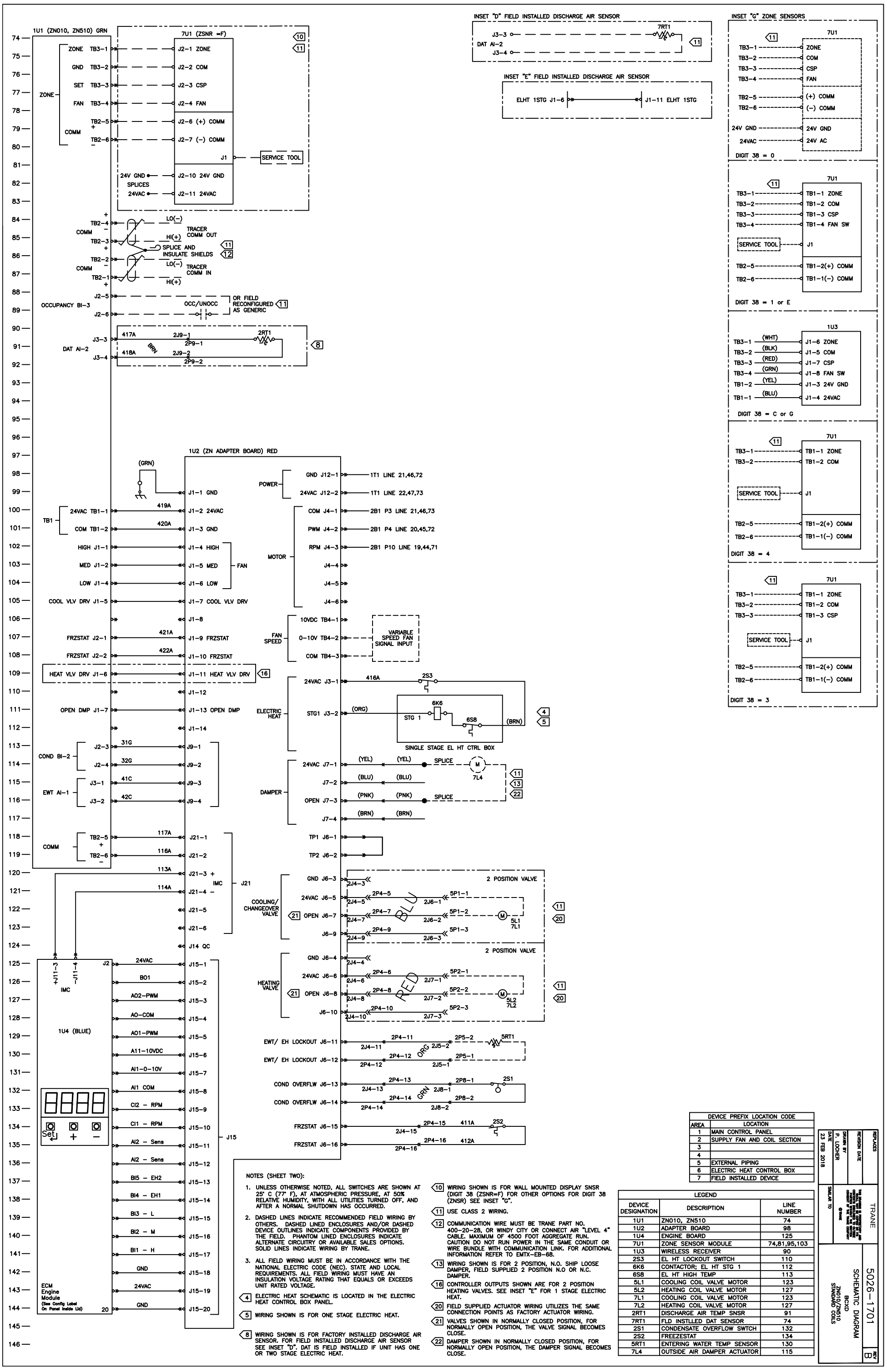

NOTES (SHEET TWO):

1. UNLESS OTHERWISE NOTED, ALL SWITCHES ARE SHOWN AT 25° C (77° F), AT ATMOSPHERIC PRESSURE, AT 50% RELATIVE HUMIDITY, WITH ALL UTILITIES TURNED OFF, AND AFTER A NORMAL SHUTDOWN HAS OCCURRED.
2. DASHED LINES INDICATE RECOMMENDED FIELD WIRING BY OTHERS. DASHED LINED ENCLOSURES AND/OR DASHED DEVICE OUTLINES INDICATE COMPONENTS PROVIDED BY THE FIELD. PHANTOM LINED ENCLOSURES INDICATE ALTERNATE CIRCUITRY OR AVAILABLE SALES OPTIONS. SOLID LINES INDICATE WIRING BY TRANE.
3. ALL FIELD WIRING MUST BE IN ACCORDANCE WITH THE NATIONAL ELECTRIC CODE (NEC). STATE AND LOCAL REQUIREMENTS. ALL FIELD WIRING MUST HAVE AN INSULATION VOLTAGE RATING THAT EQUALS OR EXCEEDS UNIT RATED VOLTAGE.

4 ELECTRIC HEAT SCHEMATIC IS LOCATED IN THE ELECTRIC HEAT CONTROL BOX PANEL.

5 WIRING SHOWN IS FOR ONE STAGE ELECTRIC HEAT.

8 WIRING SHOWN IS FOR FACTORY INSTALLED DISCHARGE AIR SENSOR. FOR FIELD INSTALLED DISCHARGE AIR SENSOR SEE INSET "D". DAT IS FIELD INSTALLED IF UNIT HAS ONE OR TWO STAGE ELECTRIC HEAT.

10 WIRING SHOWN IS FOR WALL MOUNTED DISPLAY SNSR (DIGIT 38 (ZSNR=F) FOR OTHER OPTIONS FOR DIGIT 38 (ZNSR) SEE INSET "G".

11 USE CLASS 2 WIRING.

12 COMMUNICATION WIRE MUST BE TRANE PART NO. 400-20-28, OR WINDY CITY OR CONNECT AIR "LEVEL 4" CABLE. MAXIMUM OF 4500 FOOT AGGREGATE RUN. CAUTION DO NOT RUN POWER IN THE SAME CONDUIT OR WIRE BUNDLE WITH COMMUNICATION LINK. FOR ADDITIONAL INFORMATION REFER TO EMTX-EB-68.

13 WIRING SHOWN IS FOR 2 POSITION, N.O. SHIP LOOSE DAMPER, FIELD SUPPLIED 2 POSITION N.O OR N.C. DAMPER.

16 CONTROLLER OUTPUTS SHOWN ARE FOR 2 POSITION HEATING VALVES. SEE INSET "E" FOR 1 STAGE ELECTRIC HEAT.

20 FIELD SUPPLIED ACTUATOR WIRING UTILIZES THE SAME CONNECTION POINTS AS FACTORY ACTUATOR WIRING.

21 VALVES SHOWN IN NORMALLY CLOSED POSITION, FOR NORMALLY OPEN POSITION, THE VALVE SIGNAL BECOMES CLOSE.

22 DAMPER SHOWN IN NORMALLY CLOSED POSITION, FOR NORMALLY OPEN POSITION, THE DAMPER SIGNAL BECOMES CLOSE.

DEVICE PREFIX LOCATION CODE	
AREA	LOCATION
1	MAIN CONTROL PANEL
2	SUPPLY FAN AND COIL SECTION
3	
4	
5	EXTERNAL PIPING
6	ELECTRIC HEAT CONTROL BOX
7	FIELD INSTALLED DEVICE

LEGEND		
DEVICE DESIGNATION	DESCRIPTION	LINE NUMBER
1U1	ZN010, ZN510	74
1U2	ADAPTER BOARD	98
1U4	ENGINE BOARD	125
7U1	ZONE SENSOR MODULE	74,81,95,103
1U3	WIRELESS RECEIVER	90
2S3	EL HT LOCKOUT SWITCH	110
6K6	CONTACTOR; EL HT STG 1	112
6S8	EL HT HIGH TEMP	113
5L1	COOLING COIL VALVE MOTOR	123
5L2	HEATING COIL VALVE MOTOR	127
7L1	COOLING COIL VALVE MOTOR	123
7L2	HEATING COIL VALVE MOTOR	127
2RT1	DISCHARGE AIR TEMP SNSR	91
7RT1	FLD INSTLLED DAT SENSOR	74
2S1	CONDENSATE OVERFLOW SWTCH	132
2S2	FREEZESTAT	134
5RT1	ENTERING WATER TEMP SENSOR	130
7L4	OUTSIDE AIR DAMPER ACTUATOR	115

REPLACES
REVISION DATE
DRAWN BY P. LOCHER
DATE 23 FEB 2018
SIMILAR TO
TRANE
SCHEMATIC DIAGRAM
BCXD
ZN010/ZN510 STANDARD COILS
5026-1701
REV B