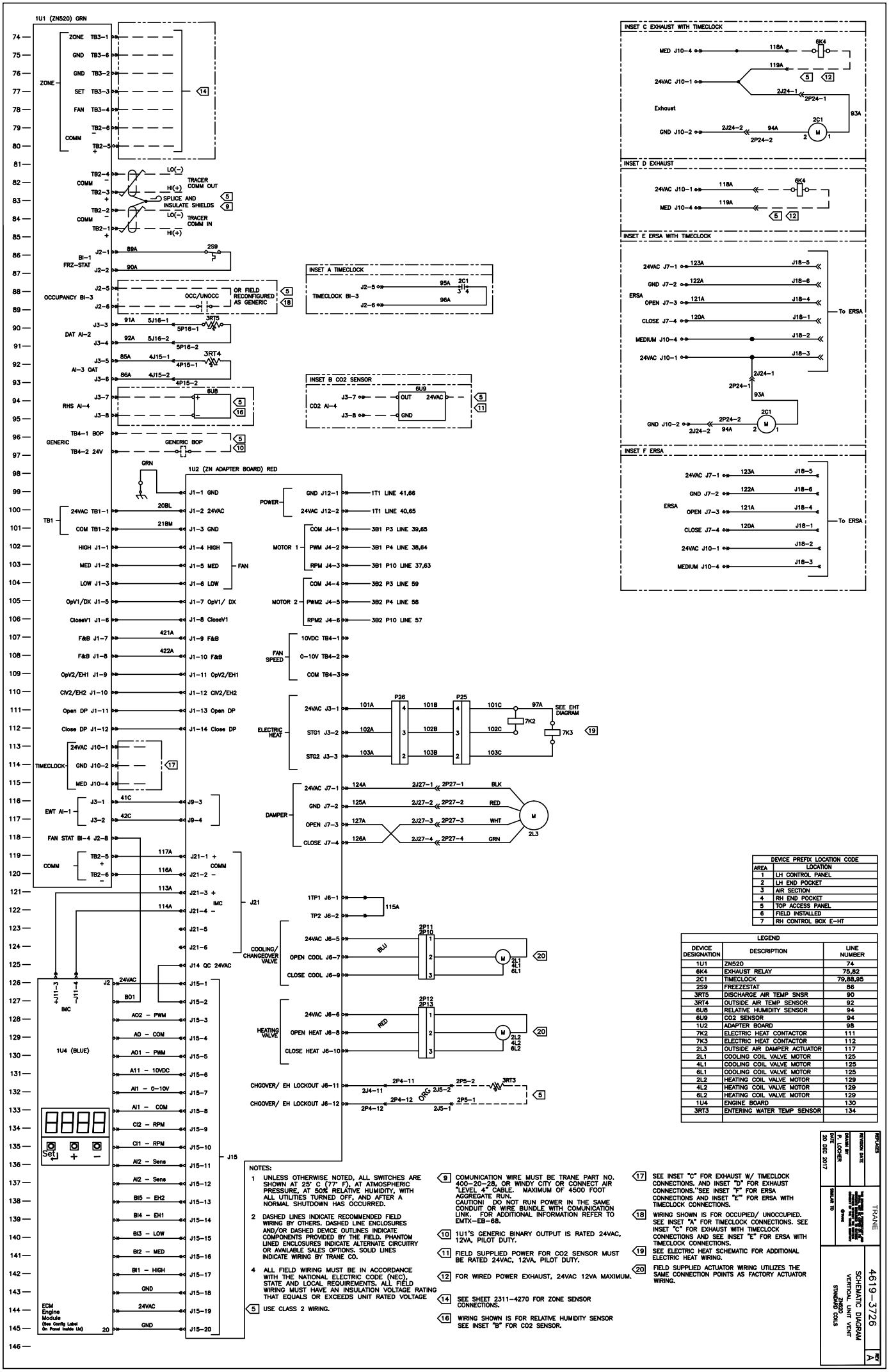

DEVICE PREFIX LOCATION CODE	
AREA	LOCATION
1	LH CONTROL PANEL
2	LH END POCKET
3	AIR SECTION
4	RH END POCKET
5	TOP ACCESS PANEL
6	FIELD INSTALLED
7	RH CONTROL BOX E-HT

LEGEND		
DEVICE DESIGNATION	DESCRIPTION	LINE NUMBER
1U1	ZN520	74
6K4	EXHAUST RELAY	75,82
2C1	TIMECLOCK	79,88,95
2S9	FREEZESTAT	86
3RT5	DISCHARGE AIR TEMP SNSR	90
3RT4	OUTSIDE AIR TEMP SENSOR	92
6U8	RELATIVE HUMIDITY SENSOR	94
6U9	CO2 SENSOR	94
1U2	ADAPTER BOARD	98
7K2	ELECTRIC HEAT CONTACTOR	111
7K3	ELECTRIC HEAT CONTACTOR	112
2L3	OUTSIDE AIR DAMPER ACTUATOR	117
2L1	COOLING COIL VALVE MOTOR	125
4L1	COOLING COIL VALVE MOTOR	125
6L1	COOLING COIL VALVE MOTOR	125
2L2	HEATING COIL VALVE MOTOR	129
4L2	HEATING COIL VALVE MOTOR	129
6L2	HEATING COIL VALVE MOTOR	129
1U4	ENGINE BOARD	130
3RT3	ENTERING WATER TEMP SENSOR	134

NOTES:

1 UNLESS OTHERWISE NOTED, ALL SWITCHES ARE SHOWN AT 25° C (77° F), AT ATMOSPHERIC PRESSURE, AT 50% RELATIVE HUMIDITY, WITH ALL UTILITIES TURNED OFF, AND AFTER A NORMAL SHUTDOWN HAS OCCURRED.

2 DASHED LINES INDICATE RECOMMENDED FIELD WIRING BY OTHERS. DASHED LINE ENCLOSURES AND/OR DASHED DEVICE OUTLINES INDICATE COMPONENTS PROVIDED BY THE FIELD. PHANTOM LINED ENCLOSURES INDICATE ALTERNATE CIRCUITRY OR AVAILABLE SALES OPTIONS. SOLID LINES INDICATE WIRING BY TRANE CO.

4 ALL FIELD WIRING MUST BE IN ACCORDANCE WITH THE NATIONAL ELECTRIC CODE (NEC), STATE AND LOCAL REQUIREMENTS. ALL FIELD WIRING MUST HAVE AN INSULATION VOLTAGE RATING THAT EQUALS OR EXCEEDS UNIT RATED VOLTAGE

5 USE CLASS 2 WIRING.

9 COMUNICATION WIRE MUST BE TRANE PART NO. 400-20-28, OR WINDY CITY OR CONNECT AIR "LEVEL 4" CABLE. MAXIMUM OF 4500 FOOT AGGREGATE RUN.
CAUTION! DO NOT RUN POWER IN THE SAME CONDUIT OR WIRE BUNDLE WITH COMUNICATION LINK. FOR ADDITIONAL INFORMATION REFER TO EMTX-EB-68.

10 1U1'S GENERIC BINARY OUTPUT IS RATED 24VAC, 12VA, PILOT DUTY.

11 FIELD SUPPLIED POWER FOR CO2 SENSOR MUST BE RATED 24VAC, 12VA, PILOT DUTY.

12 FOR WIRED POWER EXHAUST, 24VAC 12VA MAXIMUM.

14 SEE SHEET 2311-4270 FOR ZONE SENSOR CONNECTIONS.

16 WIRING SHOWN IS FOR RELATIVE HUMIDITY SENSOR SEE INSET "B" FOR CO2 SENSOR.

17 SEE INSET "C" FOR EXHAUST W/ TIMECLOCK CONNECTIONS. AND INSET "D" FOR EXHAUST CONNECTIONS."SEE INSET "F" FOR ERSA CONNECTIONS AND INSET "E" FOR ERSA WITH TIMECLOCK CONNECTIONS.

18 WIRING SHOWN IS FOR OCCUPIED/ UNOCCUPIED. SEE INSET "A" FOR TIMECLOCK CONNECTIONS. SEE INSET "C" FOR EXHAUST WITH TIMECLOCK CONNECTIONS AND SEE INSET "E" FOR ERSA WITH TIMECLOCK CONNECTIONS.

19 SEE ELECTRIC HEAT SCHEMATIC FOR ADDITIONAL ELECTRIC HEAT WIRING.

20 FIELD SUPPLIED ACTUATOR WIRING UTILIZES THE SAME CONNECTION POINTS AS FACTORY ACTUATOR WIRING.

REVISIONS	
REVISION DATE	
DRAWN BY P. LOCHER	DATE 02 DEC 2017
SIMILAR TO	

TRANE

"THE INFORMATION CONTAINED IN THIS DRAWING IS THE SOLE PROPERTY OF TRANE. ANY REPRODUCTION IN PART OR WHOLE WITHOUT WRITTEN PERMISSION OF TRANE IS PROHIBITED."

4619-3726
SCHEMATIC DIAGRAM
VERTICAL UNIT VENT
STANDARD COILS

REV A